TERASAKI
Innovators in Protection Technology

Innovations 2018

TemPower2ACB

Double Breaker

- Two Steps Ahead

World Class Air

Terasaki's *TemPower2* A.C.B is the result of an intensive market research program which took into account the requirements of switchboard builders, consultants and end users.
TemPower2 Air Circuit Breaker is one of the smallest in the market with a 1 second rating (Icw).

Innovations

- The product range of the world's smallest ACBs, *TemPower2* broadens with new 5000A and 6300A models.
- A *TemPower2* model with a frame size of 4000A is downsized.

★Based Standards

JIS C 8201-2-1 Ann.1 Ann.2 .....
IEC60947-2.....
EN60947-2.....
AS 3947-2.....
NEMA PUB NO.SG3.....
ANSI C37.13 .....

★Certification and Authorization

ASTA, UK.....
NK, Japan .....
LR, UK .....
ABS, USA .....
GL, Germany .....
BV, France.....

Circuit Breakers

Contents

1. Features 2
2. Appearance and Internal Construction ... 13
3. Ratings 14
4. Specifications 16
   1 Types of Mounting 17
   2 Accessories for Draw-out Type 18
   3 Spring Charged Operation 20
   4 Accessories for Spring Charged Operation 21
   5 Trip Devices 22
   6 Over-current Releases 24
   7 Other Accessories 36
   8 Operation Environments 43
5. Outline Dimensions 44
6. Connection 58
   1 Conductors connection area 58
   2 Busbars connection 63
   3 Recommendation for Busbars connection 63
7. Circuit Diagram 64
8. Technical and Application Data 70
9. Order Forms 76

.....Japanese Industrial Standard
.....International Electrotechnical Commission
.....European Standard
.....Australian Standard
.....National Electrical Manufacturers Association
.....American National Standard Institute

.....ASTA Certification Services
.....Nippon Kaiji Kyokai
.....Lloyd's Register of Shipping
.....American Bureau of Shipping
.....Germanischer Lloyd
.....Bureau Veritas

1 Features

The ultimate in compactness and operational capability

I_{cw},1s = I_{cs} for all *TemPower2* ACBs.

TemPower2 is the world's first "***Double Break***" ACB, having two breaking contacts per phase. The unique pole structure means that the short time withstand rating (I_{cw}, 1sec) is equal to the service short-circuit breaking capacity (I_{cs}) for all models. Full selectivity is guaranteed up to the full system fault level. ***TemPower2*** ACBs have the world's smallest depth resulting in space saving in switchboards.

More than twenty design patents have been registered for the ***TemPower2*** ACB.

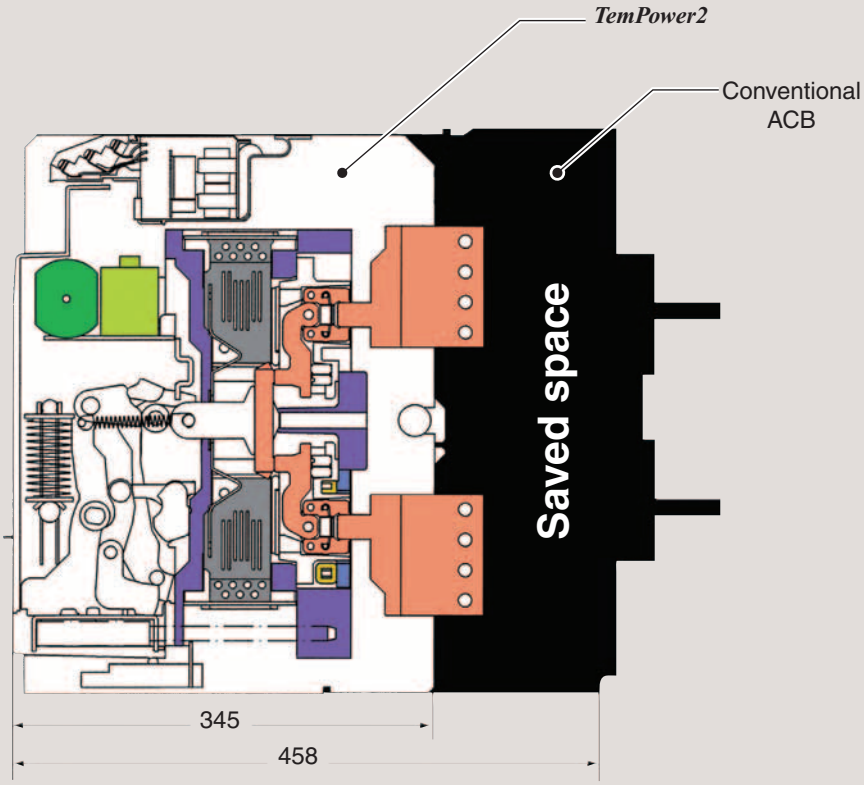

Terasaki's core business belief is commitment to our customers and the progressive innovation of the ***TemPower2*** AR ACB. With this in mind we are introducing our new **AR440SB (Compact) 4000A ACB** and new **AR6 - 5000A and 6300A ACB**. With the introduction of these new ACBs there will be a solution from 800A to 6300A all with the same front cover dimension and standardized accessories throughout the range.

Maximum power from minimum volume was central to the design specification. With a depth of 290mm for the fixed type and 345mm for draw-out, it is one of the smallest ACBs in the world.

ACBs with front connections are available off-the-shelf.

Front connections are especially suitable for smaller-depth switchboards.

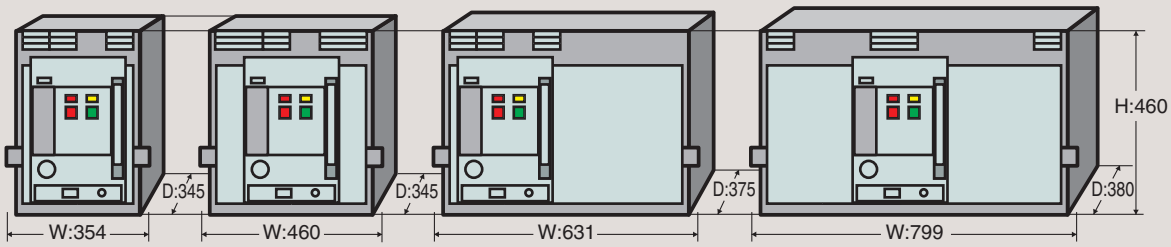

Standard series	800–2000A	2500–4000A	4000A	5000-6300A
High fault series	1250–2000A	1600–3200A	4000A	6300A

Increased accessibility from the front

It enhances ease of installation, operation, and maintenance.

The double insulated design ensures that most accessories can be safely and easily, installed by the user. Control, auxiliary and position switch terminals are mounted at the front on the ACB body for easy access. Horizontal, vertical and front terminal connections, can also be changed by the user for any last minute alterations. Due to the increased level of harmonics within the distribution network, the neutral phase is fully rated as standard.

No extra arc space required, vertical stacking permitted

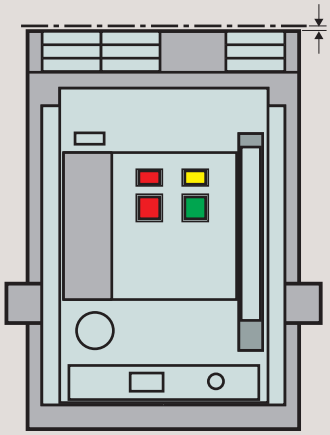

The *TemPower2* ACB dissipates all arc energy within its unique *"DoubleBreak"* arc chamber. The internal energy dissipation within the ACB allows the clearance distance of the ACB to nearby earthed metal to be zero. This will assist in minimizing switchboard height and costs.

Replacement of the main contacts※

The fixed and moving main contacts can easily be replaced in the field, thus prolonging the life on the circuit breaker. Changing each pole takes around 15 minutes.

※: Not possible on AR6

1 Features

A high performance and reliability

Very fast interruption by *"DoubleBreak"* system※

The unique ***"DoubleBreak"*** main contact system ensures extremely fast interruption of short circuit currents and substantially reduces main contact wear. The internally symmetrical ***"DoubleBreak"*** structure means the moving contact is isolated from the supply voltage even when the ACB is reverse connected. The neutral pole of all ***TemPower2*** ACBs are of early make/late break design. This eliminates the risk of abnormal line to neutral voltages, which may damage sensitive electronic equipment.
"***DoubleBreak***" contacts increase service life - Electrical and mechanical endurance ratings are the best available, and exceed the requirements of IEC 60947-2.

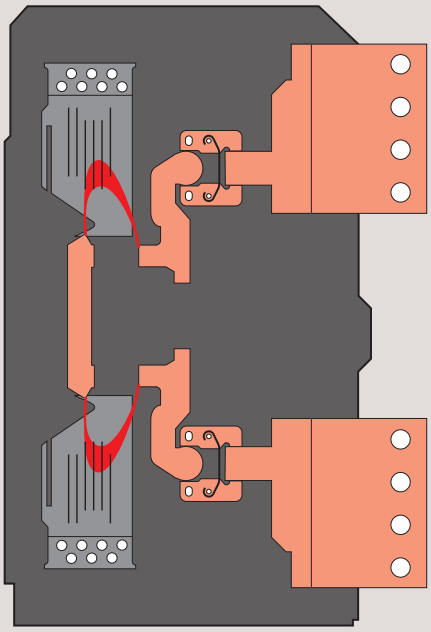

※: Except AR6

No clamp screws used for the main circuit contact units※

There are no clamp screws or flexible leads in the main circuit contact units.
This substantially enhances the durability of the main circuit contact units and improves the reliability in ON-OFF operation.

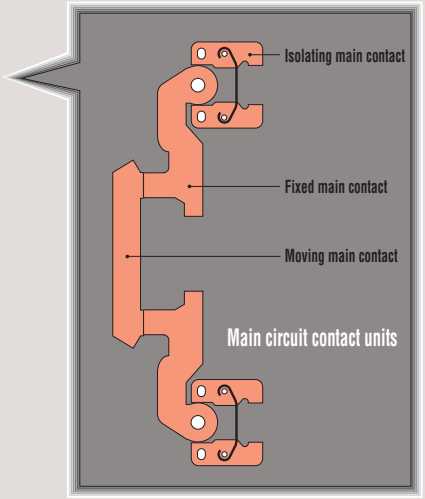

※: Except AR6

Easy Maintenance

The unique design of ***TemPower2*** incorporates its isolating clusters and main contacts on the ACB body. Allowing for quick easy maintenance of the main electrical contact points and for maintenance to be completed without having to isolate the switchboard.

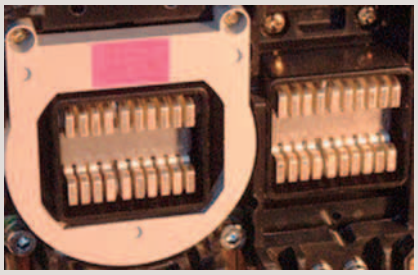

Enhanced selectivity

L Long time delay
S Short time delay
I Instantaneous

At Terasaki our protection relays have 'LSI' characteristics as standard.

This provides an adjustable time delay on overload (L) and also the I^2t ramp characteristic (S).

As shown, these are essential to provide selectivity when grading with other protective devices such as downstream fuses and up-stream relays.

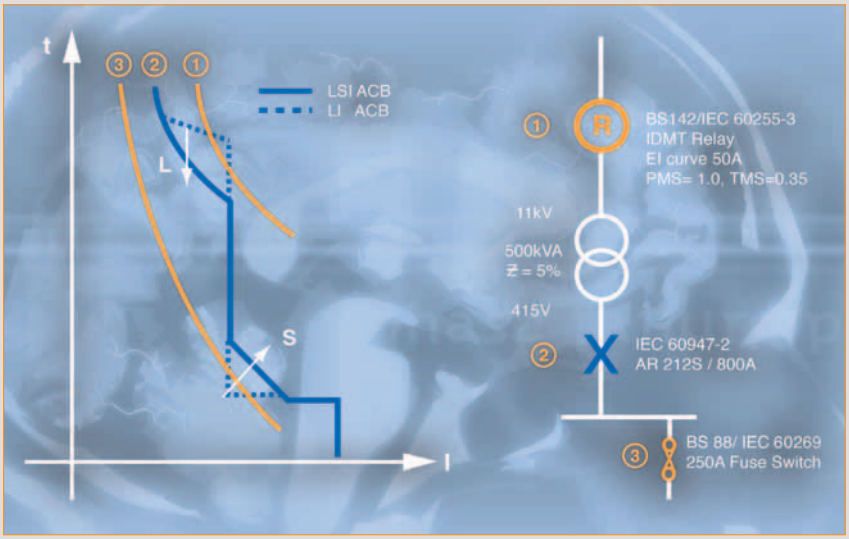

The standard 'LSI' curve provides more than five million combinations of unique time current characteristics. Zone selective interlocking is available to provide zero time delay selectivity.

As the rated breaking capacity is identical to the rated short-time withstand current full selectivity can be achieved.

Performance \ Type and rated current		AR208S 800A AR212S 1250A AR216S 1600A AR220S 2000A	AR212H 1250A AR216H 1600A AR220H 2000A	AR325S 2500A AR332S 3200A	AR316H 1600A AR320H 2000A AR325H 2500A AR332H 3200A	AR440SB 4000A AR440S 4000A	AR650S 5000A AR663S 6300A	AR663H 5000A 6300A
Rated breaking current (at AC440V)	With INST trip function With ST delay trip function (Without INST trip functions)	65kA	80kA	85kA	100kA	100kA	120kA	135kA
Rated short-time withstand current (for 1 sec.)								

A substantial improvement in life cycles

The *TemPower2* series has achieved very high life cycles compared with our competitors.

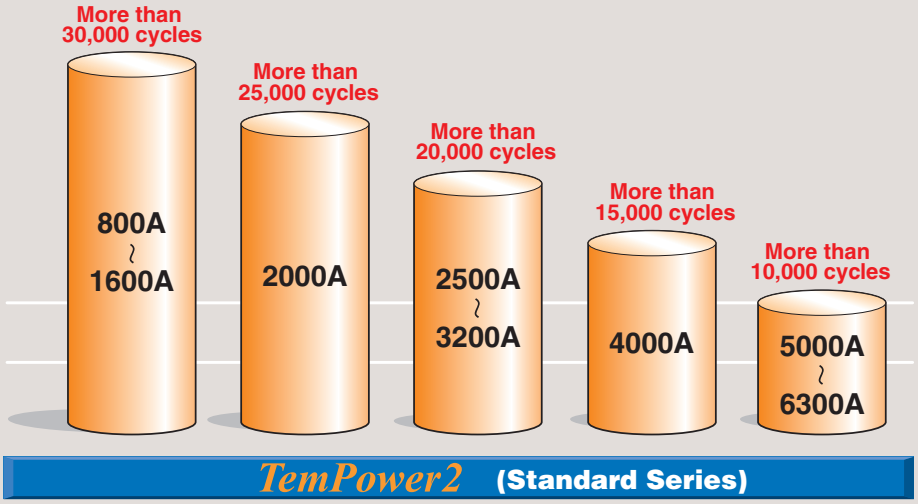

Note: above figures are the mechanical endurance with maintenance. For details please refer to pages 14 & 15.

1 Features

TemPower2 provides positive protection for electric power systems.

The *TemPower2* series is equipped with an RMS sensing over-current release (OCR) having a wide range of protection functions and capabilities.

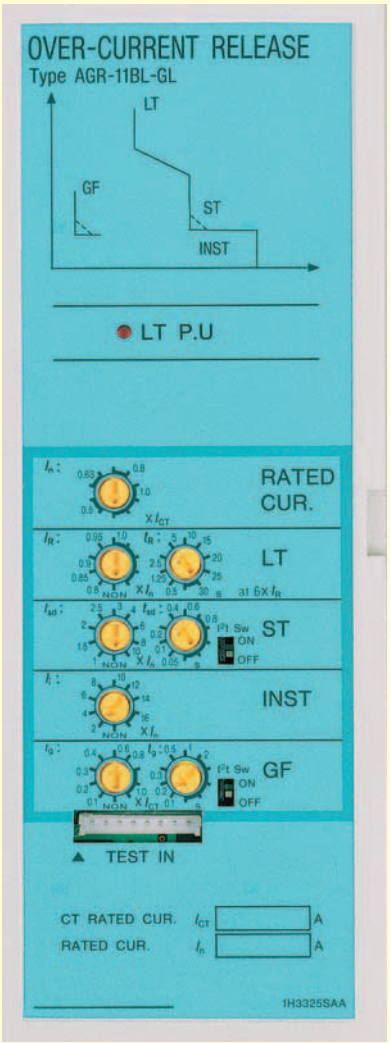

Standard OCR with adjustment dial
Type AGR-11B.

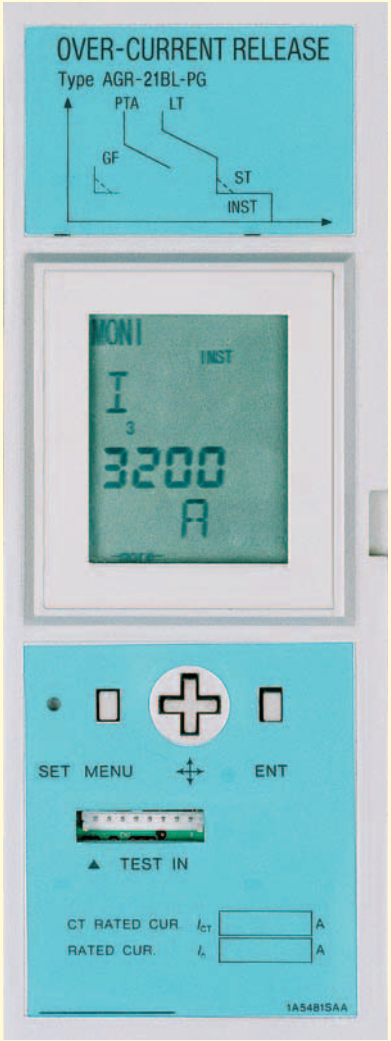

Standard OCR with LCD-'Ammeter'
Type AGR-21B,22B.

Backlit LCD optional

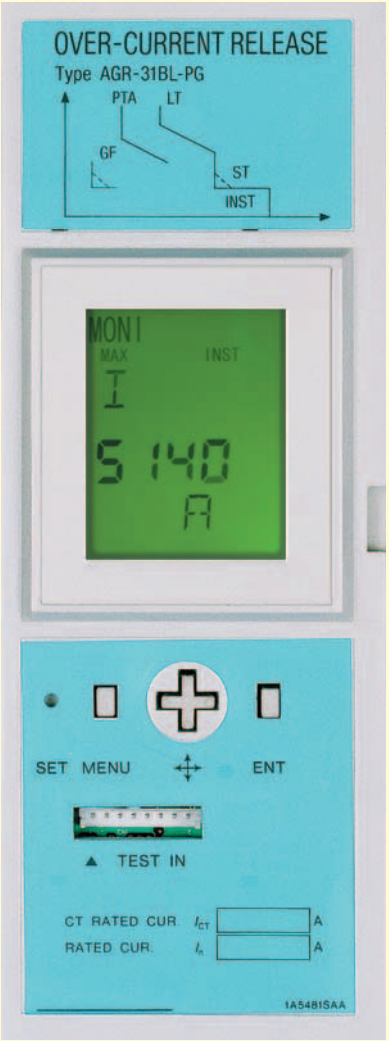

Enhanced OCR with LCD- 'Analyser'
Type AGR-31B.

Backlit LCD installed

Overload protection

Adjustable from 40–100% of rated current. True r.m.s detection up to the 19th harmonic, a distant vision for the competition who rarely see past the 7th. Neutral protection for all those Triple-N harmonics, such as 3rd, 9th and 15th. Also in case we forgot to mention, a **"thermal memory"** ia available on the AGR21B/31B.

Reverse power trip function
(S-characteristic)

This feature provides additional protection when paralleling generators. The AGR22B/31B OCR for generator protection with the reverse power trip function, negates the need for installation and wiring in an external reverse power relay. This feature is available using an AGR OCR with a generator "S" type characteristic only.

For general feeder circuits (L-characteristic)

For general feeder circuits (R-characteristic)

For generator protection (S-characteristic)

FOR FULL DETAILS REFER TO THE FEATURES TABLE PAGE 28-29

Two channel pre-trip alarm function (optional)

This function can be used to monitor and switch on additional power backup to feed critical circuits. For example, the function can be set so that when a pre-trip alarm is activated, an emergency generator starts to ensure a constant supply. This feature is only available on some AGR22B/31B OCR models with a generator “S” characteristic.

N-phase protection function (optional)

In 3-phase, 4-wire systems that contain harmonic distortion, the 3rd harmonic may cause large currents to flow through the neutral conductor. The N-phase protection function prevents the neutral conductor from sustaining damage or burnout due to these large currents. Available in all OCRs except for generator “S” characteristic types.

Ground fault trip function

This function eliminates external relays to provide a ground fault protection to TN-C or TN-S power distribution systems on the load side. Ground fault protection on the line side is also available as an option.

Earth leakage trip function

Used in conjunction with Zero phase Current Transformer (ZCT), this function provides protection against leakage to earth of very small levels of current. Trip or alarm indication, and contact output is available to enhance the level of system protection.

Phase rotation protection function

This function detects the negative-phase current occurring due to reverse phase or phase loss and prevents burnout of a motor or damage to equipment.

Advanced L.C.D. display, Over Current Relay

The AGR-31B OCR comes standard with the backlit LCD display. It can monitor and indicate phase currents, voltages, power, energy, power factor, frequency, and more. For features refer page 27. The backlit LCD is optional for AGR-21B and AGR-22B.

Remote Communications Protocols (optional)

Data communications via Modbus, an open network, are supported.

Energy Measurement

I, V, kW, MWh, kVar, cosø, frequency

Intelligent Fault Analysis

Status, fault type, fault size, tripping time, fault history

Maintenance Information

Trip circuit supervision, contact temperature monitoring.

For details please refer to page 12.

For other protocols please contact terasaki.

Contact temperature monitoring function (optional)

This function monitors the temperature of the ACBs main contacts. An alarm indicates when the temperature exceeds 155°C. Continuous monitoring of the contact temperature provides valuable input for preventative and predictive maintenance programs.

1 Features

Optimum protective coordination

Why use a separate panel mounted protection relay when you can have all the benefits of I.D.M.T. protection integral to the ACB?

TemPower2 is available with a choice of flexible protection curves to assist in selectivity applications.

S.I. Standard Inverse
V.I. Very Inverse
E.I. Extremely Inverse

All these curves are user definable and comply with IEC 60255-3. Standard transformer and generator protection characteristics are also available.

AGR-L Industrial & transformer protection
AGR-S Generator protection
AGR-R Characteristics to IEC 60255-3

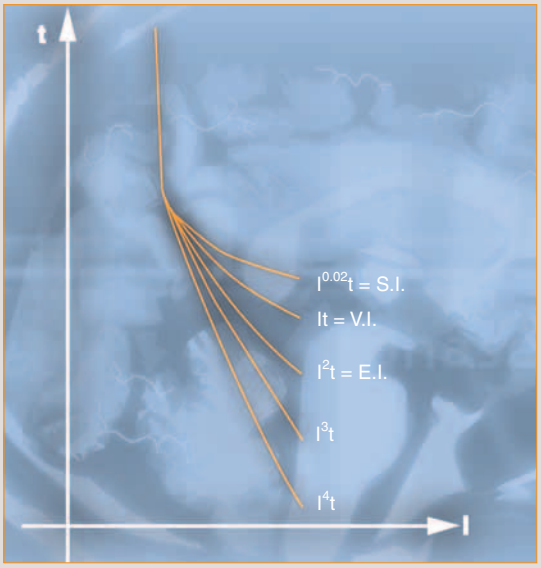

Inverse Definite Minimum Time (I.D.M.T.)

Zone Interlocking

In conventional discrimination systems, short time delays are used to allow a short-circuit current to be tripped by the circuit breaker nearest the fault. The disadvantage of this type of system is during a fault; considerable thermal and mechanical stresses are placed on the entire system. With the *TemPower2* Z Interlock system the breaker nearest the fault irrespective of the short time delay setting will trip first.

Example of operation:

If a fault occurs in Zone 2, only AR Z Interlock 'A' will sense any fault current fault, a no fault signal will be sent by AR Z Interlock 'B' & 'C', consequently AR Z Interlock 'A' trips the ACB immediately, overriding its short time delay.

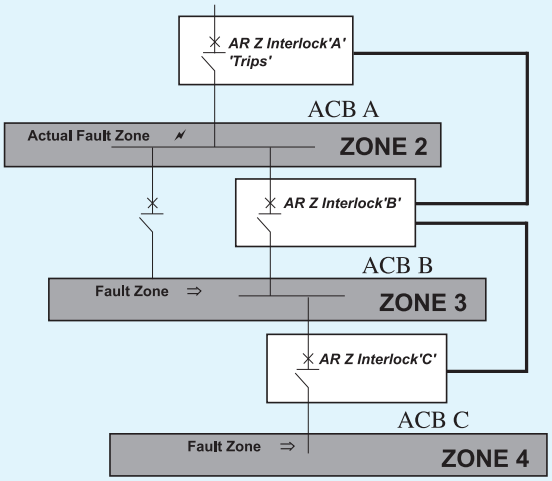

Example of AR Zone Interlock Function

Double opening and closing coils

Double Opening and Closing Coils provides extended control system redundancy to an ACB. Double coils allow designers to implement back-up tripping and closing systems. It provides the end user with ultimate reliability on critical UPS circuits connected to critical loads.

Earthing Device

The unique design of ***TemPower2 ACBs*** allows for the earthing of either the busbar (line) or the circuit (load) of a low voltage system. Thus allowing system flexibility.

Some other manufactures only offer one option either, busbar or circuit earthing.

For full details refer to page 42

Protection relay performance

Ensure that the ACB you specify suffers no loss of performance when tripped by an external protection relay!

The ***TemPower2 ACB*** suffers no loss in performance when tripped through an external protection relay.

Some competitor's ACBs have reduced breaking performance when an external protection relay is used.

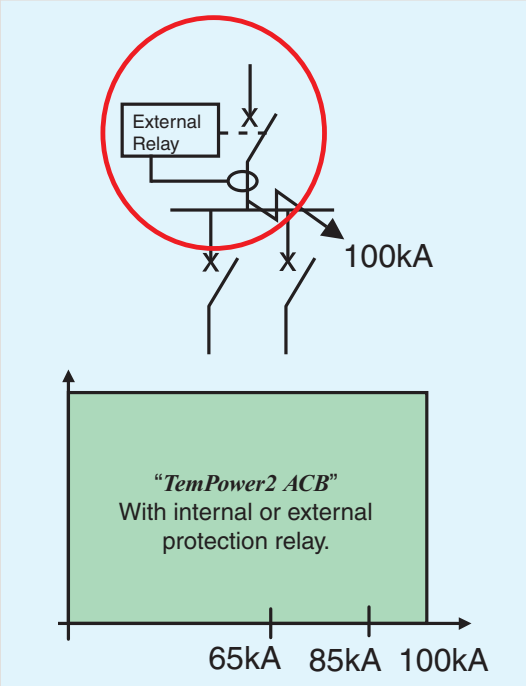

1 Features

TemCurve

TemCurve Selectivity Analysis Software is shaped around the extensive range of Terasaki circuit breakers, but also includes a large number of complimentary protective devices such as High and Low Voltage Fuses to BS88/IEC60269, IDMT Relays to BS142/IEC60255. As a result, ***TemCurve*** can assist in protection device grading from the transformer primary to the point of final distribution, giving the facility to produce overcurrent and earth fault studies.

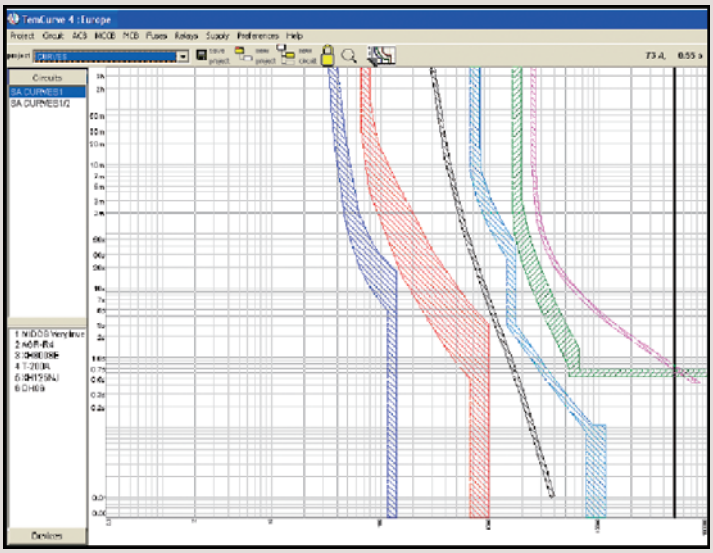

Maximum rated current of 6300A

The AR6 air circuit breaker interrupts the current at two points on the line side while dissipating heat from contacts or terminals by efficient air convection through a pressure valve.

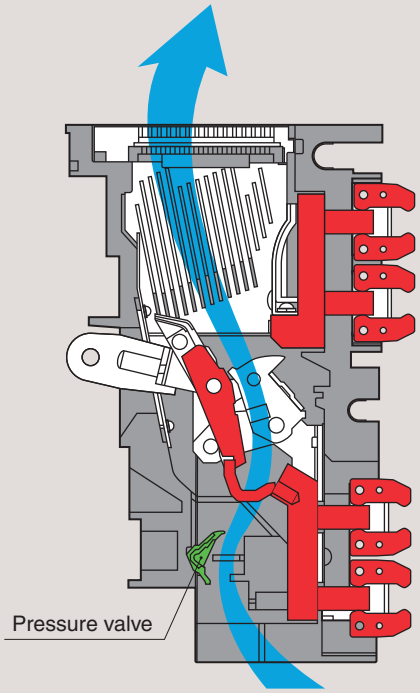

Efficient air convection through a pressure valve

Patent granted

Meeting customer requirements

TemPower2 **provides solutions to satisfy customer needs.**

SWITCHBOARD BUILDER

- Compact size for high packing density
- No extra arc space required for clearance
- Low temperature dissipation
- Built in trip supervision circuit
- Fully rated neutral as standard
- Terminal connections and accessories are field changeable
- Uniform panel cut out size

CONSULTANT

- Time Current Characteristics to IEC 60255-3
- Standard, Very and Extremely Inverse curves available
- Restricted and Unrestricted ground fault protection in one relay
- LSI characteristic curves as standard
- True r.m.s. protection
- Integral reverse power protection and load shedding relay

END USER

- Self checking protection relay and tripping coil
- Built in relay tester available on AGR21B/22B/31B can check on line without tripping the ACB
- Contact temperature monitoring
- Fault diagnosis - type of fault, magnitude, tripping time & trip history
- High making capacity for operator safety
- Communication via B.M.S. or S.C.A.D.A. system
- Main contacts can be changed within around 15 minutes per pole

1 Features

Communication facility added to *TemPower2*

TemPower2 is equipped with an optional communication interface unit that allows data exchange with a host PC via a Modbus open network. Data communicated includes measurements, fault log, maintenance information, ON/OFF status, settings, and control (ON/OFF/RESET) signals.

Fault log

Cause	Whichever trip functions, LTD, STD, INST, or GF is activated is then transmitted.
Fault current	The fault current at which the breaker tripped open is transmitted.
Trip pickup time	The trip pickup time is transmitted.

Maintenance information

Tripping circuit monitoring	The tripping coil is always monitored for disconnection. If the breaker is not open within approx. 300 ms of a trip signal delivered from the OCR, an alarm signal is generated.

Data measurement

Phase current	Phase current I_1, I_2, I_3, I_N, I_g and max current Imax are measured and transmitted.
Line-to-line voltage	V_{12}, V_{23} and V_{31} are measured.
Active power	Three-phase power and the reverse power are measured.
Demand active power	Active power demand (over time) and historical max. power are recorded.
Accumulated power	Accumulated power is measured.
Power factor	Circuit power factor is measured.
Frequency	Frequency is measured.

Note) Above is for type AGR-31 OCR.
Type AGR-21 and AGR-22 measure only phase current.

Network interface I/O specifications

Item	Modbus
Transmission standard	RS-485
Transmission method	Two-wire half-duplex
Topology	Multi-drop bus
Transmission rate	19.2 kbps max
Transmission distance	1.2 km max (at 19.2 kbps)
Data format	Modbus-RTU or ASCII
Max number of nodes	1 – 31

On-screen PC monitor

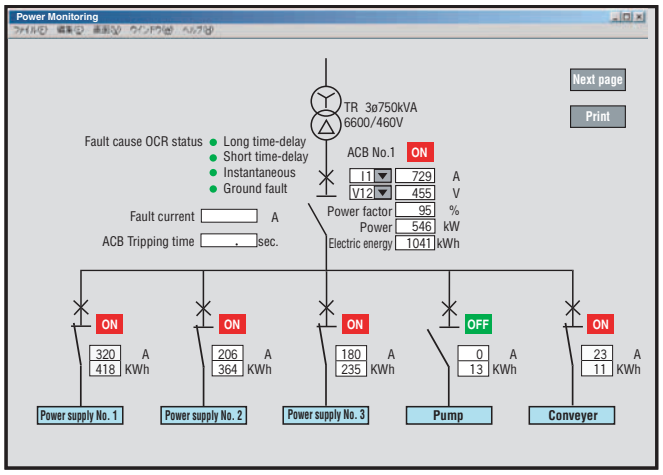

Communication network

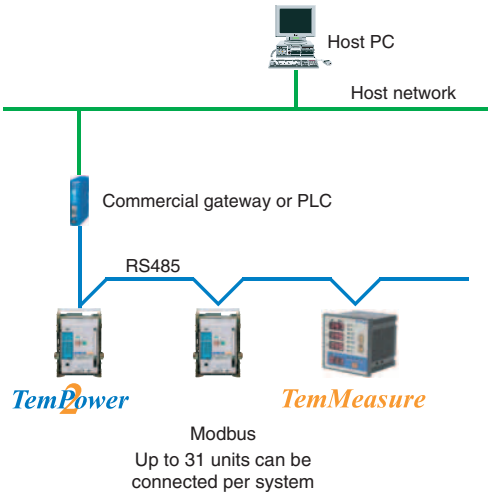

2 Appearance and Internal Construction

TemPower

Appearance

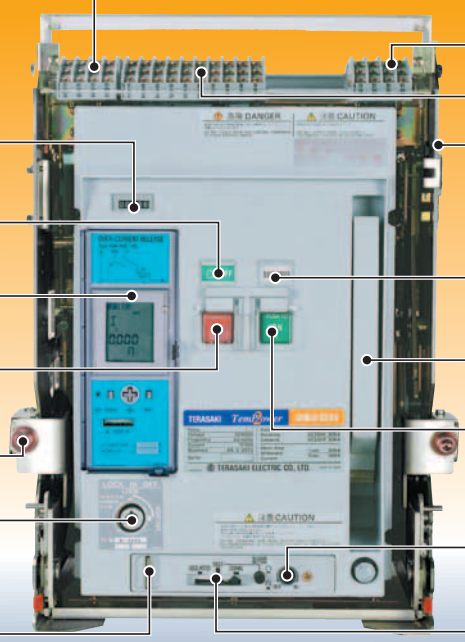

※Red ON button and GREEN OFF button are available on request.

Internal Construction

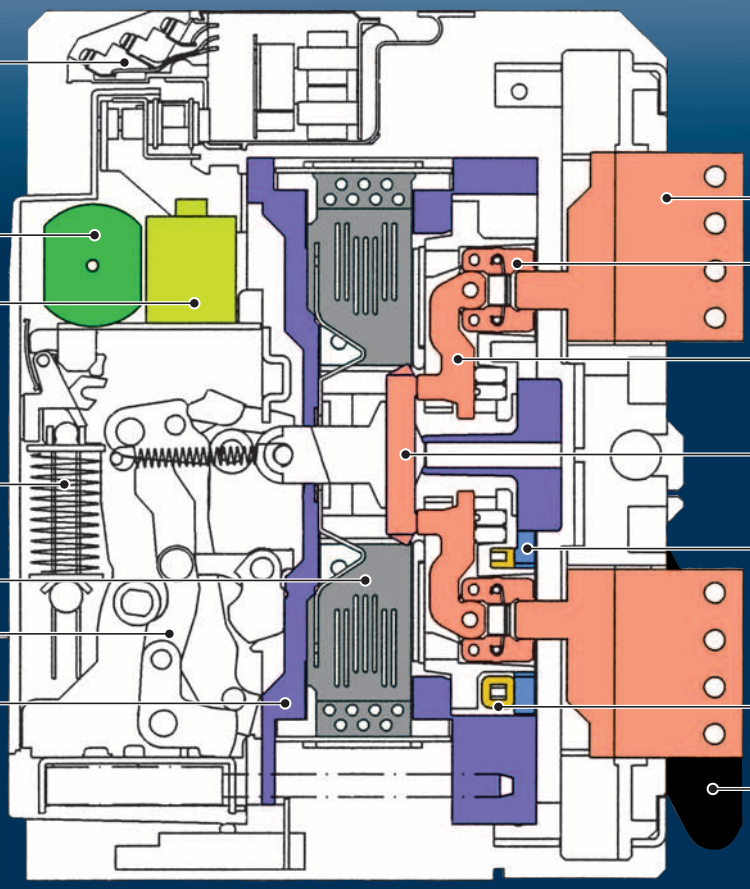

3 Ratings

Series		Standard		Standard		High fault		Standard		High fault		High fault		Standard		High fault	
AMPERE RATING(A)		800		1250		1250		1600		1600		1600		2000		2000	
TYPE		**AR208S**		**AR212S**		**AR212H**		**AR216S**		**AR216H**		**AR316H**		**AR220S**		**AR220H**	
RATED CURRENT (max) [I_n](A)	JIS⑫, IEC, EN, AS	800		1250		1250		1600		1600		1600		2000		2000	
① ②	NEMA, ANSI	800		1250		1250		1540		1600		1600		2000		2000	
	Marine	800		1250		1250		1600		1600		1600		2000		2000	
NEUTRAL POLE AMPERES FRAME (A)		800		1250		1250		1600		1600		1600		2000		2000	
NUMBER OF POLES	③ ④	3	4	3	4	3	4	3	4	3	4	3	4	3	4	3	4
RATED PRIMARY CURRENT OF OVER–CURRENT RELEASE [I_{CT}](A)		200		400		200		400		1600		200		400		2000	
		400		800		400		800				400		800			
• for general feeder circuit use		800		1000		800		1000				800		1000			
				1250		1000		1250				1250		1250			
						1250		1600				1600		1600			
														2000			
RATED CURRENT OF OVER–CURRENT RELEASE(A)		$100 \leqq I_n \leqq 200$		$200 \leqq I_n \leqq 400$		$100 \leqq I_n \leqq 200$		$200 \leqq I_n \leqq 400$		$800 \leqq I_n \leqq 1600$		$100 \leqq I_n \leqq 200$		$200 \leqq I_n \leqq 400$		$1000 \leqq I_n \leqq 2000$	
• for generator protection use		$200 < I_n \leqq 400$		$400 < I_n \leqq 800$		$200 < I_n \leqq 400$		$400 < I_n \leqq 800$				$200 < I_n \leqq 400$		$400 < I_n \leqq 800$			
[I_n] is generator rated current.		$400 < I_n \leqq 800$		$500 < I_n \leqq 1000$		$400 < I_n \leqq 800$		$500 < I_n \leqq 1000$				$400 < I_n \leqq 800$		$500 < I_n \leqq 1000$			
				$630 < I_n \leqq 1250$		$500 < I_n \leqq 1000$		$630 < I_n \leqq 1250$				$630 < I_n \leqq 1250$		$630 < I_n \leqq 1250$			
						$630 < I_n \leqq 1250$		$800 < I_n \leqq 1600$				$800 < I_n \leqq 1600$		$800 < I_n \leqq 1600$			
														$1000 < I_n \leqq 2000$			
AC RATED INSULATION VOLTAGE [U_i](V. 50/60Hz)		1000		1000		1000		1000		1000		1000		1000		1000	
RATED OPERATIONAL VOLTAGE [U_e](V. 50/60Hz)		690		690		690		690		690		690		690		690	
AC RATED BREAKING CAP [kA sym rms]/MAKING CAP [kA peak]																	
JIS⑫, IEC, EN, AS	AC 690V	50/105 ⑤		50/105 ⑤		55/121		50/105 ⑤		55/121		85/187		50/105 ⑤		55/121	
[I_{cs}= I_{cu}]	440V	65/143 ⑥		65/143 ⑥		80/176		65/143 ⑥		80/176		100/220		65/143 ⑥		80/176	
NEMA	AC 635V	42/96.6		42/96.6		42/96.6		42/96.6		42/96.6		50/115		42/96.6		42/96.6	
ANSI	508V	50/115		50/115		55/127		50/115		55/127		80/184		50/115		55/127	
	254V	65/149.5		65/149.5		80/184		65/149.5		80/184		100/230		65/149.5		80/184	
⑦⑧	DC 250V	40/40		40/40		40/40		40/40		40/40		40/40		40/40		40/40	
NK ⑨	AC 690V	50/115		50/115		55/128		50/115		55/128		85/201		50/115		55/128	
	450V	65/153 ⑥		65/153 ⑥		80/186		65/153 ⑥		80/186		100/233		65/153 ⑥		80/186	
LR, AB, ⑨	AC 690V	50/115		50/115		55/128		50/115		55/128		85/201		50/115		55/128	
GL, BV	450V	65/153 ⑥		65/153 ⑥		80/186		65/153 ⑥		80/186		100/233		65/153 ⑥		80/186	
REVERSE CONNECTED		⑮		⑮		⑮		⑮		⑮		⑮		⑮		⑮	
RATED IMPULSE WITHSTAND VOLTAGE [U_{imp}](kV)		12		12		12		12		12		12		12		12	
RATED SHORT TIME WITHSTAND	1s	65		65		80		65		80		100		65		80	
CURRENT[I_{cw}][kA rms]	3s	50		50		55		50		55		75		50		55	
LATCHING CURRENT (kA)		65		65		65		65		65		85		65		65	
TOTAL BREAKING TIME (s)		0.03		0.03		0.03		0.03		0.03		0.03		0.03		0.03	
CLOSING OPERATION TIME																	
SPRING CHARGING TIME (s) max.		10		10		10		10		10		10		10		10	
CLOSE TIME (s) max.		0.08		0.08		0.08		0.08		0.08		0.08		0.08		0.08	
No. of operating cycles																	
Mechanical life with maintenance		30000		30000		30000		30000		30000		25000		25000		30000	
without maintenance		15000		15000		15000		15000		15000		12000		12000		15000	
Electrical life without maintenance	AC460V	12000		12000		12000		12000		12000		10000		10000		12000	
	AC690V	10000		10000		10000		10000		10000		7000		7000		10000	
Draw-Out Body (kg)	⑪	45	51	45	51	46	52	46	52	46	52	56	68	46	52	46	52
Draw-Out Chassis (kg)	⑪	28	35	28	35	33	42	30	38	33	42	49	57	33	42	33	42
Total Draw-Out Weight (kg)	⑪	73	86	73	86	79	94	76	90	79	94	105	125	79	94	79	94
Fixed (kg)	⑪	53	59	53	59	54	60	54	60	54	60	80	92	54	60	54	60
OUTLINE DIMENSION (mm)																	
FIXED TYPE 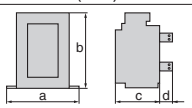	a	360	445	360	445	360	445	360	445	360	445	466	586	360	445	360	445
	b	460		460		460		460		460		460		460		460	
	c	290		290		290		290		290		290		290		290	
	d	75		75		75		75		75		75		75		75	
DRAW-OUT TYPE ⑩ 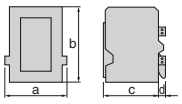	a	354	439	354	439	354	439	354	439	354	439	460	580	354	439	354	439
	b	460		460		460		460		460		460		460		460	
	c	345		345		345		345		345		345		345		345	
	d	40		40		40		40		40		40		40		40	

①: Values in open air at 40°C (45°C for marine applications).
②: Values of AR208S, AR212S, AR216S for draw-out type with horizontal terminals, Values of the other ACBs for draw-out type with vertical terminals.
③: For 2 pole ACBs use outside poles of 3 pole ACB.
④: 4poles ACBs without Neutral phases protection can not apply IT earthing system.
⑤: Cannot apply IT earthing system, i.e., insulated from earth.
⑥: For 500V AC.
⑦: ARG OCRs can not be used for DC. Please contact TERASAKI for DC application.
⑧: A special version of the breaker is available to use above 250V DC. Contact Terasaki for details.
⑨: Applicable to only 3 pole ACBs.
⑩: For vertical terminals or horizontal terminals.
⑪: These weights are based on normal specifications with the OCR and standard accessories.
⑫: Comply with JIS C 8201-2-1 Ann.1 Ann.2
⑬: Values for ACBs with INST. 100/220kA for ACBs with MCR.
⑭: Can apply IT system with special specification. Contact TERASAKI for the detail.
⑮: Available as standard.
When ordering ACB with reverse power trip function OCRs (AGR-22B or AGR-31B) that this function needs information of normal or reverse connection.
※: Contact TERASAKI for the ratings.
Note: When the INST trip function is set to NON, the MCR function should be enabled, otherwise, the rated breaking capacity is reduced to the rated latching current.

High fault	High fault	Standard	High fault	Standard	High fault	Standard	Standard	High fault	Standard	Standard	High fault
2000	2000	2500	2500	3200	3200	4000	4000	4000	5000	6300	6300
AR320H	**AR420H**	**AR325S**	**AR325H**	**AR332S**	**AR332H**	**AR440SB**	**AR440S**	**AR440H**	**AR650S**	**AR663S**	**AR663H**
2000	2000	2500	2500	3200	3200	4000	4000	4000	5000	6300	6300
2000	2000	2500	2500	3200	3200	3310	3700	3700	4700	5680	5680
2000	2000	2500	2500	3200	3200	4000	4000	4000	5000	6300	6300
2000	2000	2500	2500	3200	3200	4000	4000	4000	5000	6300	6300
3 / 4	3	3 / 4	3 / 4	3 / 4	3 / 4	3 / 4	3 / 4	3	3 / 4	3 / 4	3 / 4
2000	800 2000	2500	2500	3200	3200	4000	4000	4000	5000	6300	5000 6300
$1000 \leqq I_n \leqq 2000$	$400 \leqq I_n \leqq 800$ $1000 \leqq I_n \leqq 2000$	$1250 \leqq I_n \leqq 2500$	$1250 \leqq I_n \leqq 2500$	$1600 \leqq I_n \leqq 3200$	$1600 \leqq I_n \leqq 3200$	$2000 \leqq I_n \leqq 4000$	$2000 \leqq I_n \leqq 4000$	$2000 \leqq I_n \leqq 4000$	$2500 \leqq I_n \leqq 5000$	$3150 \leqq I_n \leqq 6300$	$2500 \leqq I_n \leqq 5000$ $3150 \leqq I_n \leqq 6300$
1000	1000	1000	1000	1000	1000	1000	1000	1000	1000	1000	1000
690	690	690	690	690	690	690	690	690	690	690	690
85/187	75/165 ⑤	65/143 ⑤	85/187	65/143 ⑤	85/187	85/187	75/165 ⑤	75/165 ⑤	85/187 ⑭	85/187 ⑤	85/187 ⑤
100/220	120/264 ⑬	85/187 ⑥	100/220	85/187 ⑥	100/220	100/220	100/220	120/264 ⑬	120/264	120/264	135/297
50/115	65/149.5	50/115	50/115	50/115	50/115	50/115	65/149.5	65/149.5	65/149.5	65/149.5	65/149.5
80/184	75/172.5	65/149.5	80/184	65/149.5	80/184	80/184	75/172.5	75/172.5	80/184	80/184	80/184
100/230	120/276	85/195.5	100/230	85/195.5	100/230	100/230	100/230	120/276	100/230	100/230	100/230
40/40	40/40	40/40	40/40	40/40	40/40	40/40	40/40	40/40	40/40	40/40	40/40
85/201	75/179	65/153	85/201	65/153	85/201	—	75/179	75/179	85/201	85/201	85/201
100/233	120/287	85/201 ⑥	100/233	85/201 ⑥	100/233	—	100/245	120/287	120/287	120/287	138/322
85/201	75/179	65/153	85/201	65/153	85/201	85/198	75/179	75/179	85/201	85/201	85/201
100/233	120/287	85/201 ⑥	100/233	85/201 ⑥	100/233	100/233	100/245	120/287	120/287	120/287	138/322
⑮	⑮	⑮	⑮	⑮	⑮	⑮	⑮	⑮	⑮	⑮	⑮
12	12	12	12	12	12	12	12	12	12	12	12
100	100	85	100	85	100	100	100	100	120	120	135
75	85	65	75	65	75	75	85	85	85	85	85
85	100	85	85	85	85	85	100	100	120	120	120
0.03	0.03	0.03	0.03	0.03	0.03	0.03	0.03	0.03	0.05	0.05	0.05
10	10	10	10	10	10	10	10	10	10	10	10
0.08	0.08	0.08	0.08	0.08	0.08	0.08	0.08	0.08	0.1	0.1	0.1
25000	15000	20000	20000	20000	20000	15000	15000	15000	10000	10000	10000
12000	8000	10000	10000	10000	10000	8000	8000	8000	5000	5000	5000
10000	3000	7000	7000	7000	7000	3000	3000	3000	1000	1000	1000
7000	2500	5000	5000	5000	5000	2500	2500	2500	500	500	500
56 / 68	71	56 / 68	56 / 68	56 / 68	56 / 68	58 / 71	71 / 92	71	125 / 160	140 / 180	140 / 180
49 / 57	76	49 / 57	49 / 57	49 / 57	49 / 57	68 / 87	68 / 84	76	75 / 100	80 / 105	80 / 105
105 / 125	147	105 / 125	105 / 125	105 / 125	105 / 125	126 / 158	139 / 176	147	200 / 260	220 / 285	220 / 285
80 / 92	—	80 / 92	80 / 92	80 / 92	80 / 92	— / —	— / —	—	— / —	— / —	— / —
466 / 586	—	466 / 586	466 / 586	466 / 586	466 / 586	— / —	— / —	—	— / —	— / —	— / —
460	—	460	460	460	460	—	—	—	—	—	—
290	—	290	290	290	290	—	—	—	—	—	—
75	—	75	75	75	75	—	—	—	—	—	—
460 / 580	631	460 / 580	460 / 580	460 / 580	460 / 580	460 / 580	631 / 801	631	799 / 1034	799 / 1034	799 / 1034
460	460	460	460	460	460	460	460	460	460	460	460
345	375	345	345	345	345	345	375	375	380	380	380
40	53	40	40	40	40	140	53	53	60	60	60

4 Specifications

TemPower2 series ACBs have an extensive range of accessories available, enabling the ACBs to be "custom built" to suit every application.

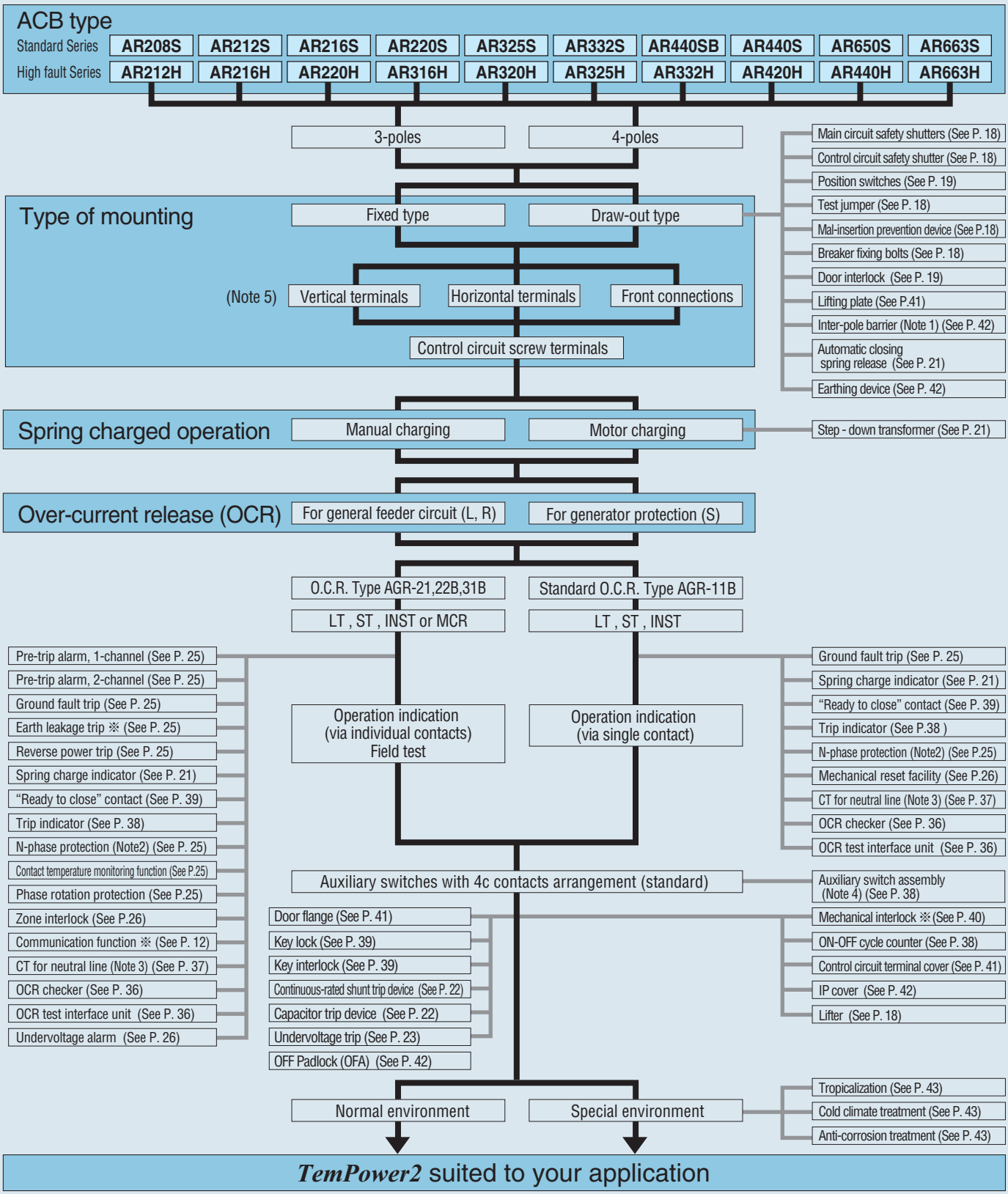

Note 1: Not applicable to ACBs equipped with front connections.
Note 2: Applicable to 4-pole ACBs.
Note 3: Required for ground fault protection for 3-poles ACB on 3-phase, 4-wire systems.
Note 4: Microload switch assembly with 3c arrangement available.
Note 5: Vertical terminal is standard and horizontal terminal is optional for High fault series. Front connection is not available for High fault series.
※: Contact Terasaki for details.

1 Types of Mounting

Draw-out type

This type of ACB consists of a breaker body and a draw-out cradle. The breaker body can be moved within or removed from the draw-out cradle that is fixed in the switchboard.
There are four breaker body positions: CONNECTED, TEST, ISOLATED, and WITHDRAWN. The switchboard panel door can be kept closed in the CONNECTED, TEST, and ISOLATED positions ("shut-in three positions").

1 CONNECTED position

Position indicator

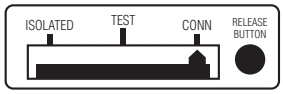

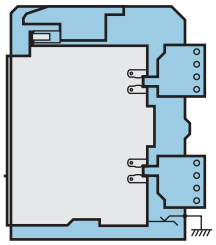

Both the main and control circuits are connected for normal service.

2 TEST position

Position indicator

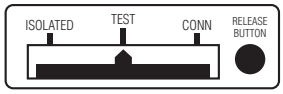

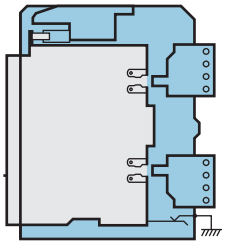

The main circuit is isolated and the control circuits are connected. This position permits operation tests without the need for opening the switchboard panel door.

3 ISOLATED position

Position indicator

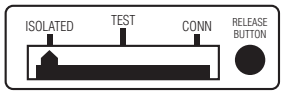

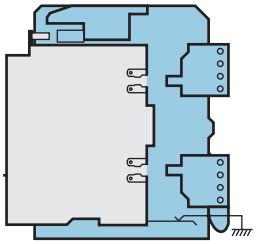

Both the main and control circuits are isolated.
The switchboard panel door does not need to be opened.

4 WITHDRAWN position

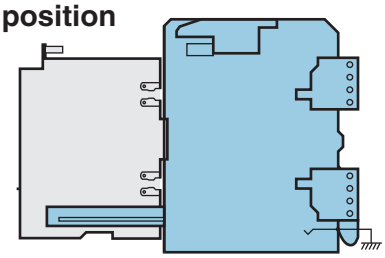

The breaker body is fully withdrawn from the draw-out cradle.

Fixed type

This type of ACB has no draw-out cradle and is designed to be directly mounted in the switchboard.

Terminal arrangements

Main circuit terminals

Three(3) types of main circuit terminal arrangements are available: vertical terminals, horizontal terminals, and front connections. Different types of terminal arrangements can be specified for the line and load sides.
Note: The max. rated current [I_n] may be reduced depending on the main circuit terminal arrangement. For more information see page 70.

Type	Vertical terminals	Horizontal terminals	Front connections
AR208S, AR212S, AR216S	○	◎	○
AR220S, AR325S, AR332S	◎	○	○
AR212H, AR216H, AR220H, AR316H, AR320H, AR325H, AR332H	◎	●	—
AR440SB, AR440S, AR650S, AR663S, AR420H, AR440H, AR663H	◎	—	—

◎: Standard. This configuration used unless otherwise specified.
○: Optional standard. Specify when ordering.
●: "yes" or "available". —: "no" or "not available".

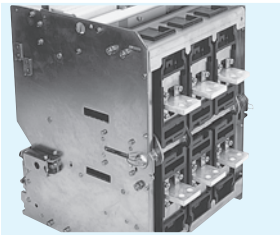

▲Horizontal terminals

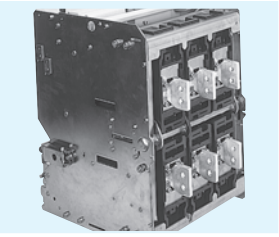

▲Vertical terminals

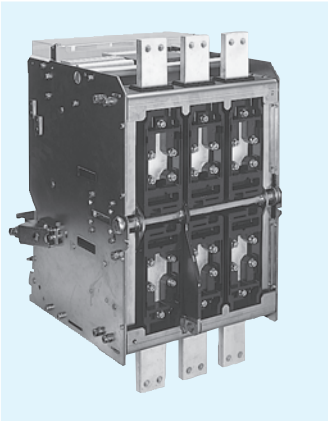

▲Front connections

Control circuit terminals

Control circuit terminals are front located to allow easy wiring/access.

- The terminal blocks (for auxiliary switches, position switches, and control circuits) are positioned on the top of the ACB front panel and can be accessed from the front for wiring.

▲Screw terminals

- M4 screw terminals are standard.

4 Specifications

2 Accessories for Draw-out Type

※: Standard equipment

Main circuit safety shutters

The main circuit safety shutters automatically conceal the main circuit contacts on the draw-out cradle when the ACB is drawn out.

- The top and bottom shutters operate independently and can be separately padlocked in the closed position.
- Up to three padlocks (with ø6 hasp) can be installed on each side using padlocking unit. (Padlock not supplied)
- In the closed position, the shutters are locked to the extent that they cannot be easily unlocked by hand. They can be unlocked and held open if required for the purpose of inspection or maintenance.

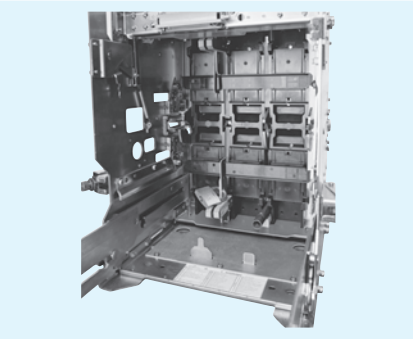

Control circuit safety shutter

The control circuit safety shutter covers the control circuit contacts, ensuring safety.

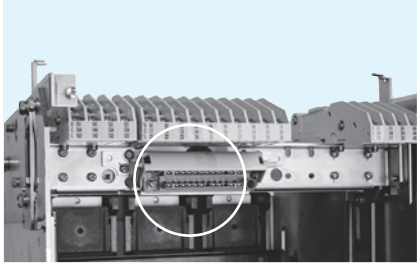

Test jumper

The test jumper is a plug-in type, and allows ON-OFF tests on all the *TemPower2* series ACBs with the breaker body drawn out from the draw-out cradle. The standard jumper cable is 5 m long.

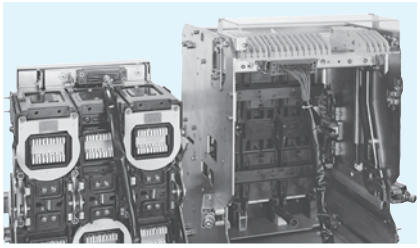

Breaker fixing bolts

The breaker fixing bolts hold the breaker body securely to the draw-out cradle in position. Use them if the ACB is subject to strong vibration.

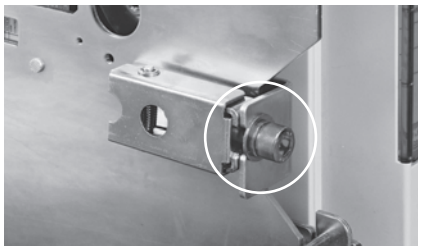

Position padlock lever ※

Using the position padlock lever prevents the breaker body from inadvertently being drawn out. The position padlock lever in the pulled-out position locks the breaker body in the CONNECTED, TEST, or ISOLATED position. Up to three padlocks (with ø6 hasp) can be installed.

Lifter

A special lifter is available to allow easy and safe transportation or installation of the ACB. A drop prevention mechanism is standard.

ACB mounting position

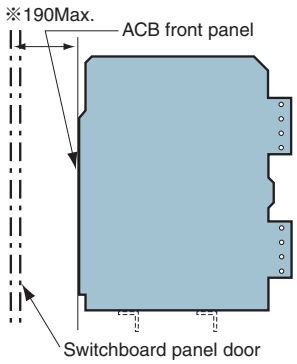

※: If 190 mm is exceeded, contact Terasaki.

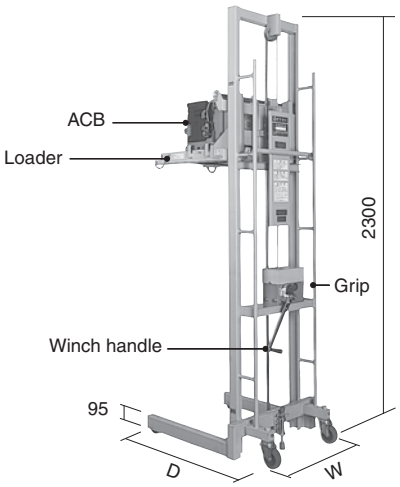

Type of Lifter	Weight (kg)	D (mm)	W (mm)	Applicable ACBs
AWR-1B	92	887	710	AR2, AR3, AR440SB
AWR-2B	110	912	1150	AR2, AR3, AR4, AR6

Mal-insertion prevention device

Interchangeability exists within the *TemPower2* series of ACBs. Because of this feature, there is a possibility for an ACB of a different specification being placed into the draw-out cradle. Using the mal-insertion prevention device eliminates such a possibility.

This device is capable of distinguishing nine different breaker bodies.

Please specify the Code 1A, 1B, 1C, 2A, 2B, 2C, 3A, 3B, 3C for each ACB.

Position switches

The position switch operates to give an indication of the breaker position: CONNECTED, TEST, ISOLATED, and INSERT.
There are two contact arrangements: 2c and 4c.
Connections to the switches are made via screw type terminals.
The following table lists the available types of the switches.

Type	Number of contacts	Contact arrangement			
		INSERT	ISOLATED	TEST	CONN
ALR-0110P	2c	0	1	1	0
ALR-0101P		0	1	0	1
ALR-0011P		0	0	1	1
ALR-0200P		0	2	0	0
ALR-0020P		0	0	2	0
ALR-0002P		0	0	0	2
ALR-1111P	4c	1	1	1	1
ALR-1210P		1	2	1	0
ALR-1201P		1	2	0	1
ALR-0211P		0	2	1	1
ALR-1120P		1	1	2	0
ALR-1021P		1	0	2	1
ALR-0121P		0	1	2	1
ALR-1102P		1	1	0	2
ALR-1012P		1	0	1	2
ALR-0112P		0	1	1	2
ALR-0220P		0	2	2	0
ALR-0202P		0	2	0	2
ALR-0022P		0	0	2	2
ALR-1030P		1	0	3	0
ALR-0130P		0	1	3	0
ALR-0031P		0	0	3	1
ALR-1003P		1	0	0	3
ALR-0103P		0	1	0	3
ALR-0013P		0	0	1	3
ALR-0040P		0	0	4	0
ALR-0004P		0	0	0	4

Position switch operation sequence

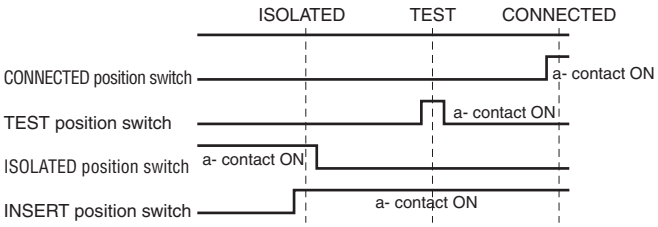

INSERT position means the breaker body is in any position between ISOLATED and CONNECTED.

Position switch ratings

Voltage	Resistive load (A)	Inductive load (A) (COS ø = 0.6, L/R = 0.07)
AC 100-250V	11	6
DC 250V	0.3	0.3
DC 125V	0.6	0.6
DC 30V	6	5
DC 8V	10	6

Door interlock

The door interlock prevents the switchboard door from being opened unless the breaker body is in the ISOLATED position.
When the draw-out handle is removed while the ACB is in the ISOLATED position, the interlock is released and the switchboard door can be opened.
The breaker body cannot be inserted unless the switchboard door is closed.
Contact Terasaki for details.

Note 1: When the door interlock is installed, the standard draw-out handle cannot be stored in the switchboard. A storage draw-out handle is available as an option. The storage draw-out handle can be housed flush with the front surface of the ACB. (The storage handle will incur extra cost).
2: Door interlock cannot be fitted with Door flange or IP cover.

4 Specifications

3 Spring Charged Operation

Manual charging type

For this type of ACB, the closing springs are charged by means of the spring charging handle. ON/OFF operation of the ACB is performed by means of ON/OFF buttons on the ACB.

■ Charging the closing springs

Pumping the spring charging handle by hand charges the closing springs.

■ Closing the ACB

Pressing the ON button on the ACB closes the ACB.

■ Opening the ACB

Pressing the OFF button on the ACB opens the ACB.
The ACB cannot be closed as long as the OFF button is pressed.

Motor charging type

For this type of ACB, the closing springs are charged by means of a motor. ON/OFF operation of the ACB can be performed remotely.
A manual charging mechanism is also fitted to facilitate inspection or maintenance work.

■ Charging the closing springs

A motor is used to charge the closing springs.
When the closing springs are released to close the ACB, they are automatically charged again by the motor for the next ON operation.

■ Closing the ACB

Turning on “remote” ON switch enables the ACB to be remotely closed.

- Anti-pumping mechanism
  Even if the ON switch is kept on, ACB closing operation is performed only once.
  To close the ACB again, remove the ON signal to reset the anti-pumping mechanism and then reapply the ON signal.
- If ON and OFF signals are simultaneously given to the ACB, the ON signal is ignored.
- ON signal should be given to the ACB on and over 200ms after OFF signal.

■ Opening the ACB

For opening the ACB remotely, specify the shunt trip device (See page 22) or the undervoltage trip (See page 23).

■ Operation power supply

Rated voltage (V)	Applicable voltage range (V)		Operation power supply ratings		
	CHARGE/ ON operation	OFF operation (Note1)	Motor inrush current (peak) (A)	Motor steady-state current (A)	Closing command current (peak) (A)
AC 100	85–110		7	1.1	0.29
AC 110	94–121		7	1.1	0.25
AC 120	102–132		7	1.1	0.22
AC 200	170–220		4	0.7	0.15
AC 220	187–242		4	0.7	0.13
AC 240	204–264		4	0.7	0.11
DC 24	18–26		14	4	1.04
DC 48	36–53		10	1.6	0.51
DC 100	75–110		6	0.8	0.25
DC 110	82–121		6	0.8	0.22
DC 125	93–138		6	0.8	0.21
DC 200	150–220		4	0.5	0.13
DC 220	165–242		4	0.5	0.12

Note 1: For the ratings refer to the shunt trip device of page 22.
※ Split circuit for motor and closing coil available on request.

4 Accessories for Spring Charged Operation

Automatic closing spring release

This device allows the charged closing springs to be automatically released when the ACB is drawn out.
ANSI or NEMA-compliant ACBs require this option.

Spring charge indicator

This switch can be used to indicate that the closing springs have been fully charged.

■ Normal contacts for general service

Voltage (V)		Switch contact ratings	
		Resistive load	Inductive load
AC	250	3	3
DC	250	0.1	0.1
	125	0.5	0.5
	30	3	2

Minimum applicable load is DC24V 10mA.

■ Gold contacts for microload

Voltage (V)		Switch contact ratings	
		Resistive load	Inductive load
AC	250	0.1	0.1
DC	30	0.1	0.1

Minimum applicable load is DC24V 1mA.

Step-down transformer (external)

The maximum rated control voltage applicable to the operation power supply is AC240V. For higher voltages, a step-down transformer is needed.
The following step-down transformers are available as options.

Rated control voltage	Transformer		
	Type	Capacity	Voltage ratio
AC410–470V	TSE-30M	300VA	450/220V
AC350–395V	TSE-30M	300VA	380/220V

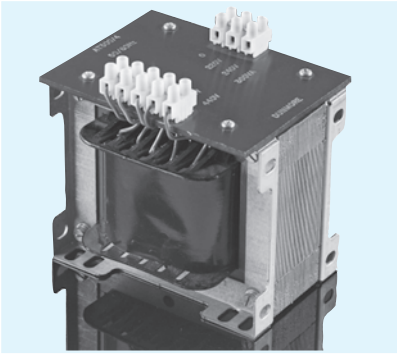

4 Specifications

5 Trip Devices

Continuously-rated shunt trip device

The continuous-rated shunt trip device allows the ACB to be opened when an external protection relay against overcurrent or reverse power is activated.

Because of its continuous rating, the device can also be used to provide an electrical interlock to the ACB.

* Continuously rated shunt trip and undervoltage trip can not be fitted to the same ACB. However, by fitting a special continuously rated shunt trip to the side plate of a ACB chassis will allow an undervoltage trip to be used in conjunction with a continuously rated shunt trip. A mechanical interlock can not be fitted with this combination.
* Instantaneously rated shunt trip also available with special specification. This shunt trip can be fitted with undervoltage trip to the same ACB.
* Instantaneously rated shunt trip device can be used to monitor the break of the shunt trip circuit.
* Special double opening and closing coils are available.

For more information contact TERASAKI.

Shunt Trip Rating (Continuously rated type)

Type	Rated voltage (V)	Operational voltage (V)	Max. excitation current (A)	Opening time (max.) (ms)
	AC100	AC70–110	0.29	
	AC110	AC77–121	0.25	
	AC120	AC84–132	0.22	
	AC200	AC140–220	0.15	
	AC220	AC154–242	0.13	
	AC240	AC168–264	0.11	
AVR–1C	DC24	DC16.8–26.4	1.04	50※
	DC30	DC21–33	0.85	
	DC48	DC33.6–52.8	0.51	
	DC100	DC70–110	0.25	
	DC110	DC77–121	0.22	
	DC125	DC87.5–137.5	0.21	
	DC200	DC140–220	0.13	
	DC220	DC154–242	0.12	

※For AR6, the opening time is 60msec.

Capacitor trip device

In conjunction with the continuously-rated shunt trip device, the capacitor trip device can be used to trip the ACB within a limited period of 30 sec if a large voltage drop occurs due to an ac power failure or short-circuit.

When the continuously-rated shunt trip is used with a capacitor trip device, “a” contact of auxiliary switch of ACB should be inserted in series, otherwise internal damage may occur.

Note: It is not possible to test the capacitor trip device when the test jumper is used.

Type	AQR-1
Rated Voltage	AC100-120V
Operational Voltage	Rated Voltage X 70 to 110%
Rated frequecy	50/60Hz
Rated Voltage of Shunt Trip Used	DC48V
Power Consumption	100VA

• Control Circuit

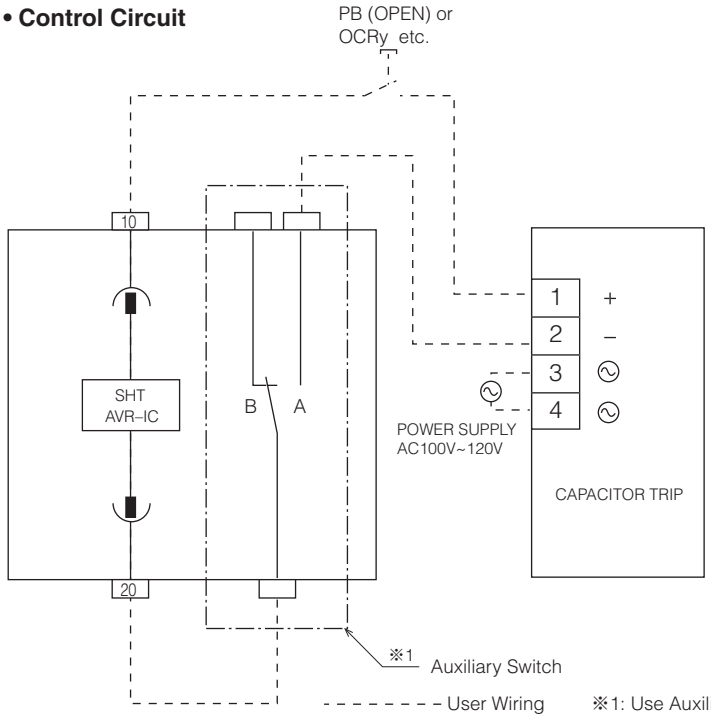

※1: Use Auxiliary Switch for capacitor trip

• Outline Dimensions

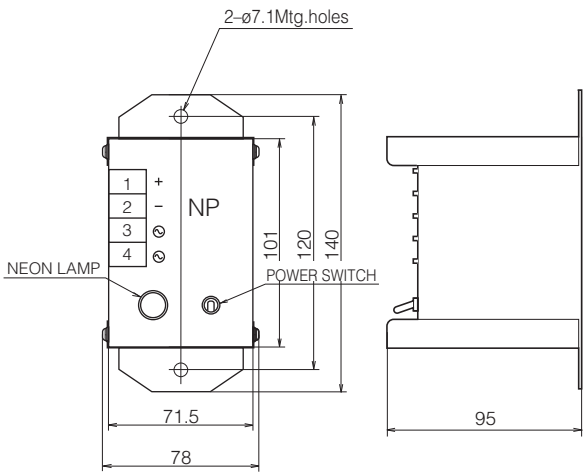

Undervoltage trip device (UVT)

The undervoltage trip device (UVT) trips the ACB when the control voltage drops below the opening voltage. When the control voltage is restored to the pick-up voltage, the ACB can be closed. The pick-up voltage is fixed to 85% of the rated voltage.

The UVT consists of a tripping mechanism and an undervoltage trip control device. The trip control device is available in two types: AUR-ICS and AUR-ICD.

Type AUR-ICS provides an instantaneous trip (below 200ms.) to the ACB when the control voltage drops below the opening voltage. Type AUR-ICD provides a delayed trip to the ACB when the control voltage remains below the opening voltage for at least 500 ms.※

Adding a pushbutton switch (with normally opened contacts) between terminals 24 and 30 allows the ACB to be tripped remotely.

※Time-delay trip over 1 sec. or 3 sec. is available as special specification.

Undervoltage trip control circuit (for AC)

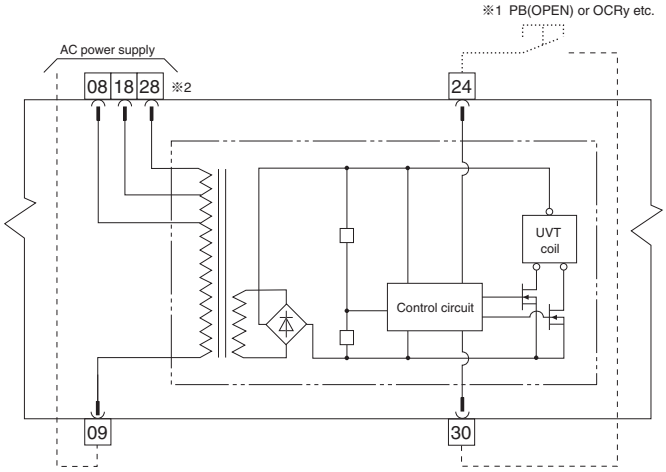

※1 Tripping signal is 48 VDC/5 mA.
Apply tripping signal for at least 80 ms.
※2 For DC type use 09 as the (–) terminal and 08 as the (+) terminal.

It takes max. 1.5sec. for UVT coil to be adsorbed after the rated voltage is applied to the undervoltage trip device. Therefore, for the closing command, the closing signal should be applied on and over 1.5sec. after the rated voltage is applied.

• Ratings

Type of UVT Control Device	Rated Voltage 50/60Hz (V)		Opening Voltage (V)	Pick-up Voltage (V)	Coil Excitation Current (A)	Power Consumption (VA) Normal	Power Consumption (VA) Reset
AUR-1CS	AC	100	35 – 70	85 or less			
AUR-1CD		110	38.5 – 77	93.5 or less			
		120	42 – 84	102 or less			
		200	70 – 140	170 or less			
		220	77 – 154	187 or less			
		240	84 – 168	204 or less			
		380	133 – 266	323 or less			
		400※3	140 – 280	340 or less	0.1	8	10
		415	145 – 290	352 or less			
		440	154 – 308	374 or less			
		450※3	157.5 – 315	382.5 or less			
		480※3	168 – 336	408 or less			
	DC	24 ※3	8.4 – 16.8	20.4 or less			
		48 ※3	16.8 – 33.6	40.8 or less			
		100 ※3 ※4	35 – 70	85 or less			

※3: Special specification.
※4: Not possilble to fit with Instantaneously rated shunt trip.

4 Specifications

6 Over-current Releases (OCRs)

The AGR series of over-current releases (OCRs) featuring high reliability and multiple protection capabilities is available for *TemPower2*.
Controlled by an internal 16-bit microprocessor, the OCR provides reliable protection against overcurrent.
The OCR range is divided into three groups: L-characteristic, R-characteristic (both for general feeder) and S-characteristic (for generator protection).
Each group consists of:
Type AGR-11B: Standard OCR with adjustment dial
Type AGR-21B,22B: Standard OCR with L.C.D. (Backlit L.C.D. optional)
Type AGR-31B: Enhanced OCR with backlit L.C.D.
Optional protection functions of the OCR include those against ground fault, earth leakage, undervoltage and reverse power.
Pre-trip alarm function can also be installed.
An AGR-11B over-current mechanical reset facility is available for special application. For more information contact TERASAKI.

Protective functions

①Adjustable long time-delay trip function LT

RMS sensing is used to accurately read through distorted waveforms.
In addition to the standard L and S-characteristics, the R-characteristic is available in five types for long time-delay trip.
The R-characteristic can be used to give selectivity with e.g. fuses. (See page 8).

■ HOT start mode (applicable to L-characteristic of AGR-21B, 31B)
HOT or COLD start mode is user-selectable.
In HOT start mode, the OCR operates faster than in COLD start mode in response to an overload. The HOT start mode gives protection, taking account of the behavior of loads under heat stress.
Note: In the standard shipmemt mode, COLD start mode is selected.

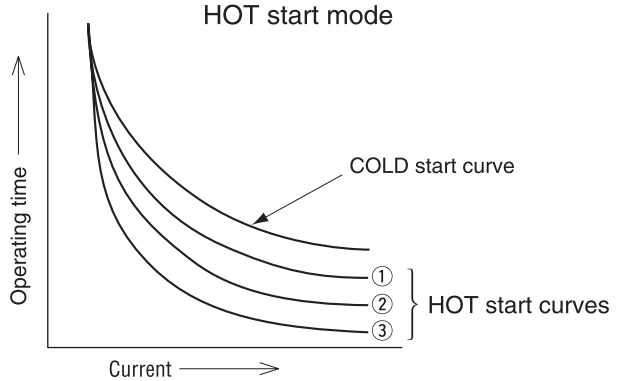

①When the OCR is set to start operation at 50% of the rated current, its operating time in HOT start mode is approx. 80% of that in COLD start mode.
②When the OCR is set to start operation at 75% of the rated current, its operating time in HOT start mode is approx. 60% of that in COLD start mode.
③When the OCR is set to start operation at 100% of the rated current, its operating time in HOT start mode is approx. 20% of that in COLD start mode.

②Adjustable short time-delay trip function ST

The ST delay trip function has a "definite time delay characteristic" and a "ramp characteristic". These characteristics are selectable.
The ramp characteristic provides close selectivity with downstream circuit breakers or fuses.
The group AGR-L and AGR-R OCRs come in operation with the definite time characteristic when the load current reaches 1000% or more of the rated current [I_n] (500% or more of the rated current [I_n] for AGR-S).
The ST trip function is factory set to the definite time characteristic.

Ramp characteristic curve
("L" or "R" characteristic)

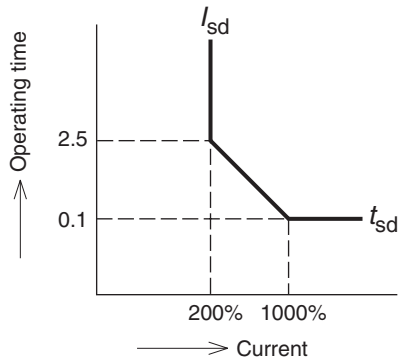

③Adjustable instantaneous trip function INST/MCR

The INST trip function trips the ACB when the short circuit current exceeds the pickup current setting, irrespective of the state of the ACB.
The making current release (MCR) trips the ACB when the short circuit current exceeds the pickup current setting during closing operation. After the ACB is closed, the MCR is locked and kept inoperative.
The INST and MCR are selectable for AGR-21B, 22B and 31B. (AGR-11B is INST only , MCR is not selectable)
Note) The MCR needs the control power. If the control power is lost, the MCR provides the INST trip function only.

④Adjustable pre-trip alarm function PTA

The pre-trip alarm function provides an alarm signal via the alarm contact (1a-contact) when the load current exceeding a predetermined value lasts for a predetermined time. A 2-channel pre-trip alarm function is available for S-characteristic. This function can be used to adjust feeding to loads according to their priority.

The pre-trip alarm is automatically reset when the load current drops to the predetermined value.

Note that this function needs the control power.

⑤Ground fault trip function GF

The peak value sensing is used (the residual current of each phase is detected).

The GF pickup current can be set between 10% and 100% of the CT rated primary current [I_{CT}]. Not available if CT primary current [I_{CT}] is 200A or less.

<Ramp characteristic is added>

The ramp and definite time characteristics are selectable. The GF trip function comes into operation with the definite time characteristic when the load current reaches 100% or more of the CT rated primary current [I_{CT}].

The GF trip function is factory set to the definite time characteristic.

When using a 3-pole ACB in a 3-phase, 4-wire system, be sure to use an optional CT for neutral line (see page 37).

Note 1: The GF trip function comes usually with operation indications. If you need nothing but ground fault indication without a ground fault tripping operation, specify at the time of ordering.

Note 2: Restricted and unrestricted ground fault protection REF is available as option. This enables protection against ground fault on the line side of the ACB.

⑥N-phase protection function NP

This NP function is available on 4-pole ACBs and prevents the neutral conductor from suffering damage or burnout due to overcurrent.

The NP trip pickup current can be set between 40% and 100% of the OCR rated primary current for L and R-characteristics.

For AGR-11B, it is factory set to a value specified at the time of ordering.

Note 1: The NP trip function comes usually with operation indications. The NP time-delay setting is shared by the LT trip function.

Note 2: The HOT start mode is available for AGR-21B and AGR-31B. The operating time for the NP trip function is linked to that for the LT trip function.

⑦Earth leakage trip function ELT

(For AGR-31B only.)

In conjunction with Zero phase Current Transformer (ZCT), the ELT function provides protection against earth leakage.

The ELT pickup current can be set at 0.2, 0.3 and 0.5A (Medium sensitivity) or 1, 2, 3, 5 and 10A (Low sensitivity).

This function needs the control power.

Note 1: Contact Terasaki for outline dimension of ACBs fitted with ZCT.

Note 2: For details on specifications of the external ZCT, contact Terasaki.

Note 3: The ELT function comes usually with operation indications. If you need nothing but earth leakage indications without earth leakage tripping operation, specify at the time of ordering.

Note 4: Contact TERASAKI for applicable models.

⑧Reverse power trip function RPT

(For AGR-22B and AGR-31B only.)

The RPT function protects 3-phase generators running in parallel against reverse power. The RPT pickup current can be set in seven levels: 4% thru 10% of the generator rated power.

If the rated main circuit voltage exceeds 250 VAC, a step-down power transformer is needed. When ordering the ACB, state the step-down ratio of the transformer you will use. ※

⑨Contact temperature monitoring function OH

(For AGR-22B and AGR-31B only.)

The HEAT function prevents the ACB from suffering damage due to overheat.

It monitors the temperature of the ACB main contacts, and gives an alarm on the LCD and an output signal via the alarm contact (1a-contact) when the temperature exceeds 155°C.

The alarm can be manually reset when the temperature drops to a normal temperature.

If you want to set the threshold temperature to a lower value, contact Terasaki.

This function needs the control power.

Note 1: “Alarm” or “Trip” can be selected.

⑩Phase rotation protection function NS

(For AGR-21B and AGR-31B only)

This function detects the negative-phase current occurring due to reverse phase or phase loss and prevents burnout of a motor or damage to equipment. The protection setpoint ranges from 20% to 100% of the main circuit rated current [I_n].

4 Specifications

⑪Undervoltage alarm function UVA

(For AGR-22B and AGR-31B only.)

This function monitors the main circuit voltage, and gives an alarm on the LCD and an output signal via an alarm contact when the voltage drops below the setting voltage.

The alarm is activated when the main circuit voltage drops below the setting voltage (selectable from 40%, 60% or 80% of the rated main circuit voltage [Vn]), and is deactivated when the main circuit voltage rises to the recovery setting voltage (selectable from 80%, 85%, 90% or 95% of the rated main circuit voltage [Vn]).

If the rated main circuit voltage exceeds 250 VAC, a step-down power transformer is needed. When ordering the ACB, state the step-down ratio of the transformer you will use. ※

Note 1: The undervoltage alarm function is disabled unless the main circuit voltage has once risen to the recovery setting voltage or higher.

Note 2: If the undervoltage alarm function is used in conjunction with the undervoltage trip device (see page 23), an alarm may occur after the ACB trips open depending on the alarm setting voltage.

⑫Zone interlock Z

(For AGR-22B and AGR-31B only)

The zone-selective interlock capability permits tripping of the ACB upstream of and nearest to a fault point in the shortest operating time, irrespective of the short time delay trip time setting, and minimizes thermal and mechanical damage to the power distribution line.

⑬Mechanical reset facility (For the AGR-11B only)

When the circuit breaker is tripped by the overcurrent tripping relay, the button pops up. Eliminate the cause for the accident and then reset the button by pressing it. Otherwise, the ACB cannot be turned ON. For further details, contact us.

※: Special version without step-down transformer

This version is specially applicable in the main-circuit voltage range from 250 to 690 VAC using the built-in register circuit board without requiring a step-down transformer. To request the version without a step-down transformer, specify your main circuit voltage.

NON setting and fail-safe feature

1 NON setting

Setting a trip pickup current function to NON allows you to render the corresponding protection function inoperative.

Functions having the NON option include LT, ST, INST/MCR, and GF.

Appropriate NON setting will be a useful means for optimum selectivity.

2 Fail-safe feature

The OCR has a fail-safe mechanism in case protection functions are improperly set to NON.

For AGR-11B

- If the ST and INST trip pickup current functions are both set to NON, the fail-safe mechanism will activate the INST trip function to trip the ACB when a fault current equal to or more than 16 times the rated current [I_n] flows through the ACB.

For AGR-21B, 22B, 31B

- If the ST trip pickup current function is set to NON, INST trip pickup current function can not be set to NON, and MCR can not be selected.
- If the INST trip pickup current function is set to NON or if MCR is selected, ST trip pickup current function can not be set to NON.

For AR663H, even if MCR is selected, the fail-safe mechanism will activate the INST trip function to trip the ACB when a fault current equal to or more than 16 times the rated current [In] flows through the ACB.

Field test facility

Type AGR-21B/22B/31B OCRs are equipped with a field test function to verify the long time delay, short time delay, instantaneous and ground fault trip features without the need for tripping of the ACB.

To check type AGR-11B, use the type ANU-1 OCR checker (optional).

Operation indication function

1 Indication via single contact (AGR-11B)

When the LT, ST, INST or GF trip function is activated, an output is generated via 1a-contact.
The 1a-contact will turn off after 40 ms or more.
A self-hold circuit is needed.

2 Indication via individual contacts (AGR-21B, 22B, 31B)

When the LT trip, ST trip, INST/MCR trip, GF trip, ELT, RPT, NS, REF, UVT, pre-trip alarm, or contact temperature monitoring function is activated, LCD will indicate their operation individually and output is generated via the corresponding contact. The OCR also has a self-diagnostic feature that monitors the internal tripping circuits. If detecting any fault in the circuits, this feature turns on the system alarm indicator. The control power is needed.

Operation indications
○: Self-hold (Note 1) ×: Auto-reset △: status indication —: Not applicable

Protective characteristic		L/R-characteristic		S-characteristic	
Function		LCD	Contact	LCD	Contact
LT・NP		○	○	○	× (Note 2)
ST		○	○ (Note 5)	○	× (Note 2 and 5)
INST/MCR		○		○	
GF (Ground fault) or ELT (Earth leakage)		○	○	—	—
(Note 3)	OH (Contact temperature monitoring)	○	○	○	○
	NS (Reverse phase)	○	○	—	—
	REF (Line side GF)	○	○	—	—
	Trip indication ※1	△	△	△	△
RPT (Reverse power trip)		—	—	○	× (Note 2)
PTA (Pretrip alarm)		×	×	×	×
(Note 4)	PTA2 (Pretrip alarm)	×	×	×	×
	UV (Undervoltage alarm)	○	△	○	△
	Spring charge indication	△	△	△	△
System alarm		○	○	○	○

Note 1: To reset the motion indication, press the button on the front of OCR.
Note 2: The contact will turn off after 500 ms or more. Use a self-hold circuit.
Note 3: Only one function can be selected from OH, NS, REF or trip indication. Selection of two or more functions involves manual connection of their control circuits (custom configuration). Contact Terasaki for details.
Note 4: Only one function can be selected from PTA2, UV or spring charge indication. Selection of two or more functions involves manual connection of their control circuits (custom configuration). Contact Terasaki for details.
Note 5: Motion indication contacts are commonly used for ST and INST/MCR.
※1: A switch is used to indicate the ACB has been tripped. This switch is activated whenever the off button, the overcurrent trip device, shunt trip device or undervoltage trip device is activated.

3 Contact ratings for Operation indication

Voltage (V)		Current (A)			
		1 Single contact		2 Individual contacts	
		Resistive load	Inductive load	Resistive load	Inductive load
AC	250	3	3	0.5	0.2
DC	250	0.3	0.15	0.27	0.04
	125	0.5	0.25	0.5	0.2
	30	3	3	2	0.7

Note: See page 38 for the contact ratings of Trip indicator.
See page 21 for the contact ratings of Spring charge indicator.

OCR with advanced L.C.D. display, type AGR-31B (contact Terasaki for details)

1 Monitoring various data on L.C.D.

OCR can monitor,

- Phase current (A) of I_1, I_2, I_3 and their max. peak current
- Current (A) of I_N, I_g
- Line voltage (V) of V_{12}, V_{23}, V_{31} and their max. peak voltage (or, Phase voltage (V) of V_{1N}, V_{2N}, V_{3N} and their peak voltage)
- Active power (W/ kW)
- Demand active power max. (W/ kW)
- Power factor (cos ø)
- Electric energy (Wh/ kWh/ MWh/ GWh)
- Frequency (Hz)
- Trip history
  Fault current is monitored, and the operation cause is indicated on LCD and via individual contacts.

Note 1: The supply voltage to the OCR for indicating the main circuit voltage or power must not exceed 250 VAC. If the main circuit voltage exceeds 250 VAC, a step-down power transformer is needed. When ordering the ACB, state the step-down ratio of the transformer you will use.

Note 2: Special version without requiring step-down transformer is applicable in the main-circuit voltage range from 250 to 690 VAC using the built-in register circuit board. To request the version without a step-down transformer, specify your main circuit voltage.

2 Gives the system alarm with number on the LCD for the following abnormal function.

- Trip function fail
- MHT circuit break

4 Specifications

OCR Specifications

Protection characteristic		*Protection Relay* Over-current release (OCR)	PROTECTION							FUNCTIONS			
			Standard Protection				Ground Fault ④		N-Phase	Indication and Monitoring			
			Long Time	Short Time	Instantaneous/ MCR		Unrestricted	Restricted	N-phase Protection	Indication		Monitoring	
										Single Contact	Individual Contacts	Ammeter	Energy Analyser
			LT	ST	INST	MCR	UREF	REF ②	NP				
Standard Protection Relays													
Dial Type	For general feeder circuits	**AGR-11BL-AL**	●	●	---	------	------	○	●	------	------	------	
Dial Type	For general feeder circuits	**AGR-11BL-GL**	●	●	---	●	------	○	●	------	------	------	
Standard LCD Type	For general feeder circuits	**AGR-21BL-PS**	●	●	●	------	------	○	------	●	●	------	
Standard LCD Type	For general feeder circuits	**AGR-21BL-PG**	●	●	●	●	○	○	------	●	●	------	
Specialised Protection Relays													
Standard LCD Type	IEC 60255-3 ①	AGR-21BR-PS	●	●	●	------	------	○	------	●	●	------	
Standard LCD Type	IEC 60255-3 ①	AGR-21BR-PG	●	●	●	●	○	○	------	●	●	------	
Standard LCD Type	For generator protection	AGR-21BS-PS	●	●	●	------	------	------	------	●	●	------	
Standard LCD Type	For generator protection	AGR-22BS-PR	●	●	●	------	------	------	------	●	●	------	
Enhanced LCD Type	For general feeder circuits	AGR-31BL-PS	●	●	●	------	------	○	------	●	------	●	
Enhanced LCD Type	For general feeder circuits	AGR-31BL-PG	●	●	●	●	○	○	------	●	------	●	
Enhanced LCD Type	IEC 60255-3 ①	AGR-31BR-PS	●	●	●	------	------	○	------	●	------	●	
Enhanced LCD Type	IEC 60255-3 ①	AGR-31BR-PG	●	●	●	●	○	○	------	●	------	●	
Enhanced LCD Type	For generator protection	AGR-31BS-PS	●	●	●	------	------	------	------	●	------	●	
Enhanced LCD Type	For generator protection	AGR-31BS-PR	●	●	●	------	------	------	------	●	------	●	

● : Available as standard
○ : Available as option
— : Not available

① : Standard Inverse, Very Inverse, Extremely Inverse Curves
② : Only one function can be selected from OH, NS, REF or trip indication. Selection of two or more functions involves manual connection of their control circuits (special specification). Contact Terasaki for details.
③ : Only one function can be selected from PTA2, UV or spring charge indication. Selection of two or more functions involves manual connection of their control circuits (special specification). Contact Terasaki for details.
④ : Not available if CT rated primary current [I_{CT}] is 200A or less.
⑤ : Available up to 3,200A rated current [I_n].
⑥ : Over AC 250V, a step down VT is required.

For full operational information see pages 24 to 27

Note: When a protection function of AGR-11B OCRs with single-contact indication is activated, the corresponding operation LED indicator is ON momentarily or OFF.
But the LED indicator is kept ON when the protection function is checked with the optional OCR checker.

SPECIAL APPLICATIONS												
Contact Temperature Monitoring **OH②**	Zone Interlock **Z**	Earth Leakage Protection **ELT⑤**	Reverse Power Protection **RPT⑥**	Phase Rotation Protection **NS②**	Under Voltage Alarm **UVA③**	Pre-Trip Alarm **PTA**	Pre-Trip Alarm **③ PTA2**	Spring Charge Indication ③	Trip Indication ②	Commu--nication **C**	Field Test	Control Power
------	------	------	------	------	------	------	------	○	○	------	------	Not Required
------	------	------	------	------	------	------	------	○	○	------	------	Not Required
------	------	------	------	○	------	●	------	○	○	○	●	Required
------	------	------	------	○	------	●	------	○	○	○	●	Required
------	------	------	------	○	------	●	------	○	○	○	●	Required
------	------	------	------	○	------	●	------	○	○	○	●	Required
------	------	------	------	------	------	●	------	○	○	○	●	Required
○	○	------	●	------	○	●	○	○	○	○	●	Required
○	○	○	------	○	○	●	------	○	○	○	●	Required
○	○	------	------	○	○	●	------	○	○	○	●	Required
○	○	○	------	○	○	●	------	○	○	○	●	Required
○	○	------	------	○	○	●	------	○	○	○	●	Required
○	○	------	------	------	○	●	○	○	○	○	●	Required
○	○	------	●	------	○	●	○	○	○	○	●	Required

If the control power is not supplied or is lost, each function operates as follows:		
LT, ST, INST, RPT		Operates normally.
GF		Operates normally
		When the CT rated primary current [I_{CT}] is less than 800A and the GF pick-up current is set to 10 %, the GF becomes inoperative.
MCR		Operates as INST.
PTA	1-channel PTA 2-channel PTA	Is inoperative.
ELT		Is inoperative.
LED indicator on OCRs with single-contact indication		Is on momentarily or off.
Contact output from OCRs with single-contact indication		Turns off after 40 ms or more.
Contact output from OCRs with individual contact indication		Is inoperative.
LCD		Will display without backlit.
Field test facility		Is inoperative.

4 Specifications

L-characteristic for general feeder circuits (Type AGR-11BL, 21BL, 31BL)

Setting range of protection functions

Protection functions	Setting range
■ Adjustable long time-delay trip characteristics	
LT	
Pick-up current [I_R] (A)	[I_n]×(0.8 – 0.85 – 0.9 – 0.95 – 1.0 – NON) ; 6 graduations • Non tripping when load current ≦ ([I_R]×1.05). • Tripping when ([I_R]×1.05) < load current ≦ ([I_R]×1.2)
Time-delay [t_R] (s)	(0.5 – 1.25 – 2.5 – 5 – 10 – 15 – 20 – 25 – 30) at 600% of [I_R]; 9 graduations
Time-delay setting tolerance (%)	±15% +150ms – 0ms
■ Adjustable short time-delay trip characteristics	
ST	
Pick-up current [I_{sd}] (A)	[I_n]×(1 – 1.5 – 2 – 2.5 – 3 – 4 – 6 – 8 – 10 – NON) ; 10 graduations
Current setting tolerance (%)	±15%
Time-delay [t_{sd}] (ms) Relay time	50 / 100 / 200 / 400 / 600 / 800 ; 6 graduations
Resettable time (ms)	25 / 75 / 175 / 375 / 575 / 775
Max. total clearing time (ms)	120 / 170 / 270 / 470 / 670 / 870
■ Adjustable instantaneous trip characteristics	
INST or MCR (For AGR-11B, INST only)	
Pick-up current [I_i] (A)	[I_n]×(2 – 4 – 6 – 8 – 10 – 12 – 14 – 16 – NON) ; 9 graduations
Current setting tolerance (%)	±20%
■ Adjustable pre-trip alarm characteristics	
PTA	
Pick-up current [I_{P1}] (A)	[I_n]×(0.75 – 0.8 – 0.85 – 0.9 – 0.95 – 1.0) ; 6 graduations
Current setting tolerance (%)	±7.5%
Time-delay [t_{P1}] (s)	(5 – 10 – 15 – 20 – 40 – 60 – 80 – 120 – 160 – 200) at [I_{P1}] or more; 10 graduations
Time-delay setting tolerance (%)	±15% +100ms – 0ms
■ Adjustable ground fault trip characteristics	
GF	Note: Set [I_g] to 1200A or less.
Pick-up current [I_g] (A)	[I_{CT}]×(0.1 – 0.2 – 0.3 – 0.4 – 0.6 – 0.8 – 1.0 – NON) ; 8 graduations
Current setting tolerance (%)	±20%
Time-delay [t_g] (ms) Relay time	100 / 200 / 300 / 500 / 1000 / 2000 ; 6 graduations
Resettable time (ms)	75 / 175 / 275 / 475 / 975 / 1975
Max. total clearing time (ms)	170 / 270 / 370 / 570 / 1070 / 2070
Ground fault trip characteristics on line side	
REF (AGR-21B, 31B only)	
Pick-up current [I_{REF}] (A)	[I_{CT}]×(0.1 – 0.2 – 0.3 – 0.4 – 0.6 – 0.8 – 1.0 – NON) ; 8 graduations
current setting tolerance (%)	±20%
Time-delay (s)	Inst
■ N-phase protection characteristics	
NP	
Pick-up current [I_N] (A)	[I_{CT}]×(0.4 – 0.5 – 0.63 – 0.8 – 1.0) ; Factory set to a user-specified value for AGR-11BL. • Non tripping when load current ≦ ([I_N]×1.05). • Tripping when ([I_N]×1.05) < load current ≦ ([I_N]×1.2)
Time-delay [t_N] (s)	Tripping at 600% of [I_N] with LT time-delay [t_R]
Time-delay setting tolerance (%)	±15% +150ms – 0ms
■ Phase rotation protection characteristics	
NS (AGR-21B, 31B only)	
Pick-up current [I_{NS}] (A)	[I_n]×(0.2 – 0.3 – 0.4 – 0.5 – 0.6 – 0.7 – 0.8 – 0.9 – 1.0) ; 9 graduations
current setting tolerance (%)	±10%
Time-delay [t_{NS}] (s)	(0.4 – 0.8 – 1.2 – 1.6 – 2 – 2.4 – 2.8 – 3.2 – 3.6 – 4) at 150% of [I_{NS}] ; 10 graduations
Time-delay setting tolerance (%)	±20% +150ms – 0ms
■ Adjustable earth leakage trip characteristics	
ELT (AGR-31B only)	
Pick-up current [$I_{\Delta R}$] (A)	0.2 – 0.3 – 0.5 (Medium sensitivity) or 1 – 2 – 3 – 5 – 10 (Low sensitivity)
Current setting tolerance	Non operate below 70% of [$I_{\Delta R}$], Operate between 70% and 100% of [$I_{\Delta R}$].
Time-delay [$t_{\Delta R}$] (ms) Relay time	100 / 150 / 300 / 500 / 800 / 1500 / 3000 ; 7 graduations
Resettable time (ms)	50 / 100 / 250 / 450 / 750 / 1450 / 2950
Max. total clearing time (ms)	250 / 300 / 450 / 650 / 950 / 1650 / 3150
■ Undervoltage alarm characteristics	
UV (AGR-31B only)	
Recovery setting voltage (V)	[V_n]×(0.8 – 0.85 – 0.9 – 0.95) ; 4 graduations
Recovery voltage setting tolerance (%)	±5%
Setting voltage (V)	[V_n]×(0.4 – 0.6 – 0.8) ; 3 graduations
Voltage setting tolerance (%)	±5%
Time-delay (s)	0.1 – 0.5 – 1 – 2 – 5 – 10 – 15 – 20 – 30 – 36 ; 10 graduations
Time-delay setting tolerance (%)	±15% +100ms–0ms
■ Control power	AC100 – 120V, AC200 – 240V Common / DC100 – 125V, DC200 – 250V Common / DC24V, DC48V Common Power consumption: 5 VA

__ : Default setting

■ Values of [I_{CT}] and [I_n]

Type	Applicable [I_{CT}] (A)	Rated current [I_n](A) [I_{CT}] ×0.5	[I_{CT}] ×0.63	[I_{CT}] ×0.8	[I_{CT}] ×1.0
AR208S	**200**	100	125	160	200
	400	200	250	320	400
	800	400	500	630	800
AR212S	**400**	200	250	320	400
	800	400	500	630	800
	1000	500	630	800	1000
	1250	630	800	1000	1250
AR216S	**400**	200	250	320	400
	800	400	500	630	800
	1000	500	630	800	1000
	1250	630	800	1000	1250
	1600	800	1000	1250	1600

Type	Applicable [I_{CT}] (A)	Rated current [I_n](A) [I_{CT}] ×0.5	[I_{CT}] ×0.63	[I_{CT}] ×0.8	[I_{CT}] ×1.0
AR220S	**400**	200	250	320	400
	800	400	500	630	800
	1000	500	630	800	1000
	1250	630	800	1000	1250
	1600	800	1000	1250	1600
	2000	1000	1250	1600	2000
AR325S	**2500**	1250	1600	2000	2500
AR332S	**3200**	1600	2000	2500	3200
AR440SB	**4000**	2000	2500	3200	4000
AR440S	**4000**	2000	2500	3200	4000
AR650S	**5000**	2500	3200	4000	5000
AR663S	**6300**	3200	4000	5000	6300

Type	Applicable [I_{CT}] (A)	Rated current [I_n](A) [I_{CT}] ×0.5	[I_{CT}] ×0.63	[I_{CT}] ×0.8	[I_{CT}] ×1.0
AR212H	**200**	100	125	160	200
	400	200	250	320	400
	800	400	500	630	800
	1000	500	630	800	1000
	1250	630	800	1000	1250
AR216H	**1600**	800	1000	1250	1600
AR220H	**2000**	1000	1250	1600	2000
AR316H	**200**	100	125	160	200
	400	200	250	320	400
	800	400	500	630	800
	1250	630	800	1000	1250
	1600	800	1000	1250	1600
AR320H	**2000**	1000	1250	1600	2000
AR325H	**2500**	1250	1600	2000	2500
AR332H	**3200**	1600	2000	2500	3200
AR420H	**800**	400	500	630	800
	2000	1000	1250	1600	2000
AR440H	**4000**	2000	2500	3200	4000
AR663H	**5000**	2500	3200	4000	5000
	6300	3200	4000	5000	6300

Protection characteristics

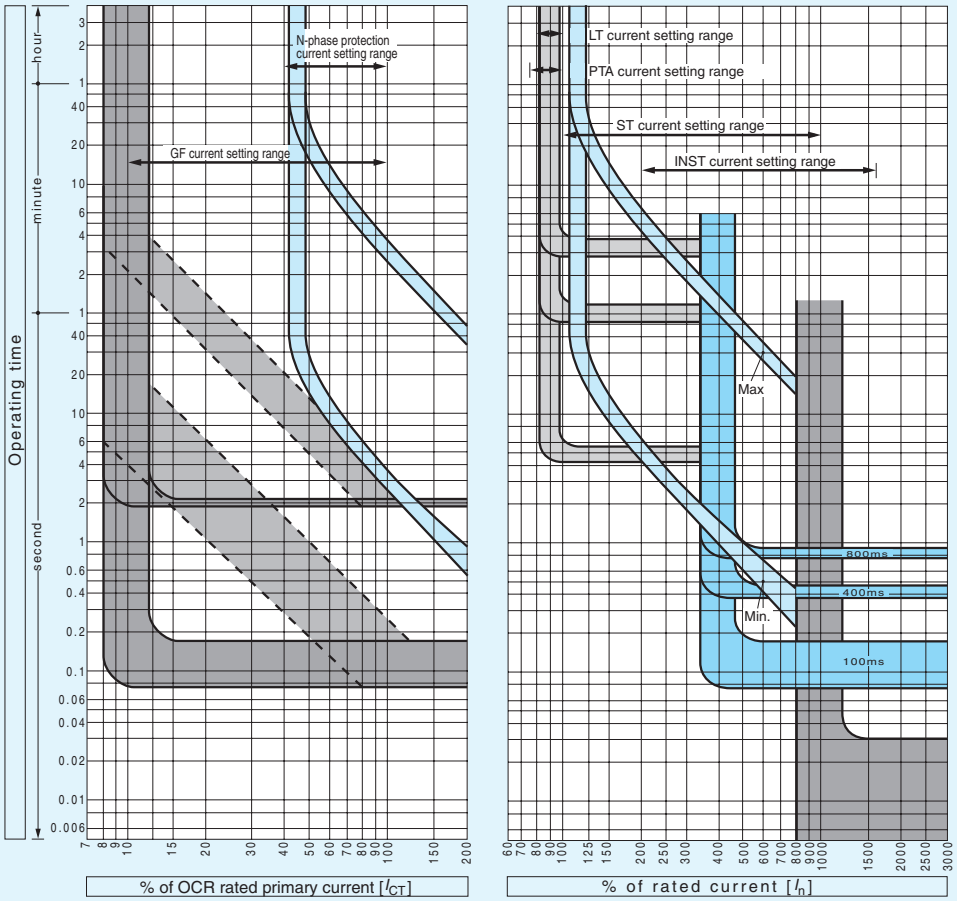

The ST trip characteristic shown in the figure applies when the ramp characteristic select switch is in the OFF position.

Note: Total breaking time for AR6 is 0.05sec.

4 Specifications

R-characteristic for general feeder circuits (Type AGR-21BR, 31BR)

Setting range of protection functions

Protection functions	Setting range
■ Adjustable long time-delay trip characteristics	Select one from among $I^{0.02}t$, It, I^2t, I^3t, and I^4t on LCD.
LT	
Pick-up current [I_R] (A)	[I_n]×(0.8 – 0.85 – 0.9 – 0.95 – 1.0 – NON) ; 6 graduations
Current setting tolerance (%)	±5%
Time-delay [t_R] (s)	(1 – 2 – 3 – 4 – 5 – 6.3 – 6.8 – 10) at 300% of [I_R]; 8 graduations
Time-delay setting tolerance (%)	±20% +150ms – 0ms
■ Adjustable short time-delay trip characteristics	
ST	
Pick-up current [I_{sd}] (A)	[I_n]×(1 – 1.5 – 2 – 2.5 – 3 – 4 – 6 – 8 – 10 – NON) ; 10 graduations
Current setting tolerance (%)	±15%
Time-delay [t_{sd}] (ms) Relay time	50 / 100 / 200 / 400 / 600 / 800 ; 6 graduations
Resettable time (ms)	25 / 75 / 175 / 375 / 575 / 775
Max. total clearing time (ms)	120 / 170 / 270 / 470 / 670 / 870
■ Adjustable instantaneous trip characteristics	
INST or MCR	
Pick-up current [I_i] (A)	[I_n]×(2 – 4 – 6 – 8 – 10 – 12 – 14 – 16 – NON) ; 9 graduations
Current setting tolerance (%)	±20%
■ Adjustable pre-trip alarm characteristics	
PTA	
Pick-up current [I_{P1}] (A)	[I_n]×(0.75 – 0.8 – 0.85 – 0.9 – 0.95 – 1.0) ; 6 graduations
Current setting tolerance (%)	±7.5%
Time-delay [t_{P1}] (s)	(5 – 10 – 15 – 20 – 40 – 60 – 80 – 120 – 160 – 200) at [I_{P1}] or more; 10 graduations
Time-delay setting tolerance (%)	±15% +100ms – 0ms
■ Adjustable ground fault trip characteristics	
GF	Note: Set [I_g] to 1200A or less.
Pick-up current [I_g] (A)	[I_{CT}]×(0.1 – 0.2 – 0.3 – 0.4 – 0.6 – 0.8 – 1.0 – NON) ; 8 graduations
Current setting tolerance (%)	±20%
Time-delay [t_g] (ms) Relay time	100 / 200 / 300 / 500 / 1000 / 2000 ; 6 graduations
Resettable time (ms)	75 / 175 / 275 / 475 / 975 / 1975
Max. total clearing time (ms)	170 / 270 / 370 / 570 / 1070 / 2070
Ground fault trip characteristics on line side	
REF	
Pick-up current [I_{REF}] (A)	[I_{CT}]×(0.1 – 0.2 – 0.3 – 0.4 – 0.6 – 0.8 – 1.0 – NON) ; 8 graduations
current setting tolerance (%)	±20%
Time-delay (s)	Inst
■ N-phase protection characteristics	
NP	
Pick-up current [I_N] (A)	[I_{CT}]×(0.4 – 0.5 – 0.63 – 0.8 – 1.0) ; Factory set to a user-specified value for AGR-11BR.
Current setting tolerance (%)	±5%
Time-delay [t_N] (s)	Tripping at 300% of [I_N] with LT time-delay [t_R]
Time-delay setting tolerance (%)	±20% +150ms – 0ms
■ Phase rotation protection characteristics	
NS	
Pick-up current [I_{NS}] (A)	[I_n]×(0.2 – 0.3 – 0.4 – 0.5 – 0.6 – 0.7 – 0.8 – 0.9 – 1.0) ; 9 graduations
current setting tolerance (%)	±10%
Time-delay [t_{NS}] (s)	(0.4 – 0.8 – 1.2 – 1.6 – 2 – 2.4 – 2.8 – 3.2 – 3.6 – 4) at 150% of [I_{NS}] ; 10 graduations
Time-delay setting tolerance (%)	±20% +150ms – 0ms
■ Adjustable earth leakage trip characteristics	
ELT (AGR-31B only)	
Pick-up current [$I_{\Delta R}$] (A)	0.2 – 0.3 – 0.5 (Medium sensitivity) or 1 – 2 – 3 – 5 – 10 (Low sensitivity)
Current setting tolerance	Non operate below 70% of [$I_{\Delta R}$], Operate between 70% and 100% of [$I_{\Delta R}$].
Time-delay [$t_{\Delta R}$] (ms) Relay time	100 / 150 / 300 / 500 / 800 / 1500 / 3000 ; 7 graduations
Resettable time (ms)	50 / 100 / 250 / 450 / 750 / 1450 / 2950
Max. total clearing time (ms)	250 / 300 / 450 / 650 / 950 / 1650 / 3150
■ Undervoltage alarm characteristics	
UV (AGR-31B only)	
Recovery setting voltage (V)	[V_n]×(0.8 – 0.85 – 0.9 – 0.95) ; 4 graduations
Recovery voltage setting tolerance (%)	±5%
Setting voltage (V)	[V_n]×(0.4 – 0.6 – 0.8) ; 3 graduations
Voltage setting tolerance (%)	±5%
Time-delay (s)	0.1 – 0.5 – 1 – 2 – 5 – 10 – 15 – 20 – 30 – 36 ; 10 graduations
Time-delay setting tolerance (%)	±15% +100ms–0ms
■ Control power	AC100 – 120V, AC200 – 240V Common; DC100 – 125V, DC200 – 250V Common; DC24V, DC48V Common
	Power consumption: 5 VA

__ : Default setting

■ Values of [I_{CT}] and [I_n]

Type	Applicable [I_{CT}] (A)	Rated current [I_n](A) [I_{CT}] ×0.5	[I_{CT}] ×0.63	[I_{CT}] ×0.8	[I_{CT}] ×1.0
AR208S	**200**	100	125	160	200
	400	200	250	320	400
	800	400	500	630	800
AR212S	**400**	200	250	320	400
	800	400	500	630	800
	1000	500	630	800	1000
	1250	630	800	1000	1250
AR216S	**400**	200	250	320	400
	800	400	500	630	800
	1000	500	630	800	1000
	1250	630	800	1000	1250
	1600	800	1000	1250	1600

Type	Applicable [I_{CT}] (A)	Rated current [I_n](A) [I_{CT}] ×0.5	[I_{CT}] ×0.63	[I_{CT}] ×0.8	[I_{CT}] ×1.0
AR220S	**400**	200	250	320	400
	800	400	500	630	800
	1000	500	630	800	1000
	1250	630	800	1000	1250
	1600	800	1000	1250	1600
	2000	1000	1250	1600	2000
AR325S	**2500**	1250	1600	2000	2500
AR332S	**3200**	1600	2000	2500	3200
AR440SB	**4000**	2000	2500	3200	4000
AR440S	**4000**	2000	2500	3200	4000
AR650S	**5000**	2500	3200	4000	5000
AR663S	**6300**	3200	4000	5000	6300

Type	Applicable [I_{CT}] (A)	Rated current [I_n](A) [I_{CT}] ×0.5	[I_{CT}] ×0.63	[I_{CT}] ×0.8	[I_{CT}] ×1.0
AR212H	**200**	100	125	160	200
	400	200	250	320	400
	800	400	500	630	800
	1000	500	630	800	1000
	1250	630	800	1000	1250
AR216H	**1600**	800	1000	1250	1600
AR220H	**2000**	1000	1250	1600	2000
AR316H	**200**	100	125	160	200
	400	200	250	320	400
	800	400	500	630	800
	1250	630	800	1000	1250
	1600	800	1000	1250	1600
AR320H	**2000**	1000	1250	1600	2000
AR325H	**2500**	1250	1600	2000	2500
AR332H	**3200**	1600	2000	2500	3200
AR420H	**800**	400	500	630	800
	2000	1000	1250	1600	2000
AR440H	**4000**	2000	2500	3200	4000
AR663H	**5000**	2500	3200	4000	5000
	6300	3200	4000	5000	6300

Protection characteristics

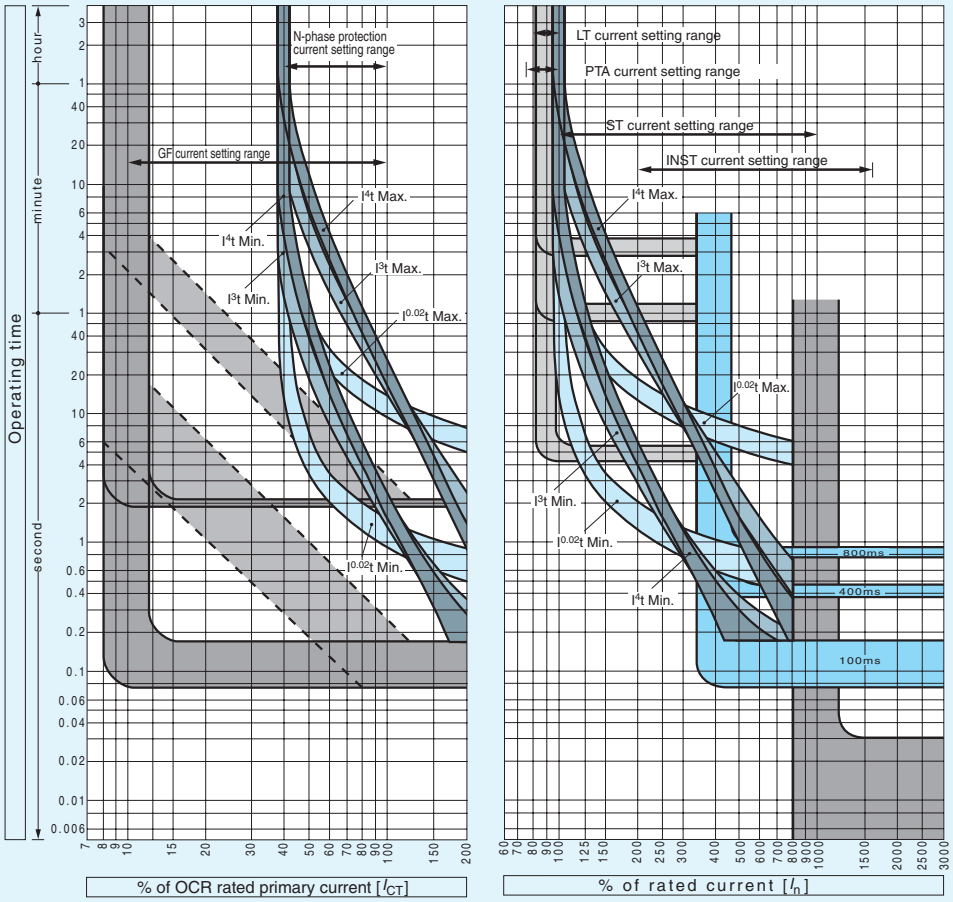

The ST trip characteristic shown in the figure applies when the ramp characteristic select switch is in the OFF position.

Note: Total breaking time for AR6 is 0.05sec.

4 Specifications

S-characteristic for generator protection (Type AGR-21BS, 22BS, 31BS)

Setting range of protection functions

Protection functions	Setting range
■ Adjustable long time-delay trip characteristics	
LT	
Pick-up current [I_R] (A)	[I_n]×(0.8 – 1.0 – 1.05 – 1.1 – 1.15 – NON) ; 6 graduations
Current setting tolerance (%)	±5%
Time-delay [t_R] (s)	(15 – 20 – 25 – 30 – 40 – 50 – 60) at 120% of [I_R]; 7 graduations
Time-delay setting tolerance (%)	±15% +150ms – 0ms
■ Adjustable short time-delay trip characteristics	
ST	
Pick-up current [I_{sd}] (A)	[I_n]×(2 – 2.5 – 2.7 – 3 – 3.5 – 4 – 4.5 – 5 – NON) ; 9 graduations
Current setting tolerance (%)	±10%
Time-delay [t_{sd}] (ms) Relay time	100 / 200 / 300 / 400 / 600 / 800 ; 6 graduations
Resettable time (ms)	75 / 175 / 275 / 375 / 575 / 775
Max. total clearing time (ms)	170 / 270 / 370 / 470 / 670 / 870
■ Adjustable instantaneous trip characteristics	
INST or MCR	
Pick-up current [I_i] (A)	[I_n]×(2 – 4 – 6 – 8 – 10 – 12 – 14 – 16 – NON) ; 9 graduations
Current setting tolerance (%)	±20%
■ Adjustable pre-trip alarm characteristics	
PTA	
Pick-up current [I_{P1}] (A)	[I_n]×(0.75 – 0.8 – 0.85 – 0.9 – 0.95 – 1.0 – 1.05) ; 7 graduations
Current setting tolerance (%)	±5%
Time-delay [t_{P1}] (s)	(10 – 15 – 20 – 25 – 30) at 120% of [I_{P1}]; 5 graduations
Time-delay setting tolerance (%)	±15% +100ms – 0ms
PTA 2 (AGR-22B, 31B only)	
Pick-up current [I_{P2}] (A)	[I_n]×(0.75 – 0.8 – 0.85 – 0.9 – 0.95 – 1.0 – 1.05) ; 7 graduations
Current setting tolerance (%)	±5%
Time-delay [t_{P2}] (s)	1.5 [t_{P1}] at 120% of [I_{P2}]
Time-delay setting tolerance (%)	±15% +100ms – 0ms
■ Adjustable reverse power trip characteristics	
RPT (AGR-22B, 31B only)	
Pick-up power [P_R] (kW)	Rated power [P_n]×(0.04 – 0.05 – 0.06 – 0.07 – 0.08 – 0.09 – 0.1 – NON) ; 8 graduations
Power setting tolerance (%)	+0 – 20%
Time-delay [time] (s)	(2.5 – 5 – 7.5 – 10 – 12.5 – 15 – 17.5 – 20) at 100% of [P_R]; 8 graduations
Time-delay setting tolerance (%)	±20%
■ Undervoltage alarm characteristics	
UV (AGR-22B, 31B only)	
Recovery setting voltage (V)	[V_n]×(0.8 – 0.85 – 0.9 – 0.95) ; 4 graduations
Recovery voltage setting tolerance (%)	±5%
Setting voltage (V)	[V_n]×(0.4 – 0.6 – 0.8) ; 3 graduations
Voltage setting tolerance (%)	±5%
Time-delay (s)	0.1 – 0.5 – 1 – 2 – 5 – 10 – 15 – 20 – 30 – 36 ; 10 graduations
Time-delay setting tolerance (%)	±15% +100ms–0ms
■ Control power	AC100 – 120V, AC200 – 240V (Common); DC100 – 125V, DC200 – 250V (Common); DC24V, DC48V (Common)
	Power consumption: 5 VA

__ : Default setting

Applicable range of generator rated current [I_n]

Type	OCR rated primary current [I_{CT}](A)	Applicable range of generator rated current [I_n] (A)
AR208S	200	100≦[I_n]≦200
	400	200<[I_n]≦400
	800	400<[I_n]≦800
AR212S	400	200≦[I_n]≦400
	800	400<[I_n]≦800
	1000	500<[I_n]≦1000
	1250	630<[I_n]≦1250
AR216S	400	200≦[I_n]≦400
	800	400<[I_n]≦800
	1000	500<[I_n]≦1000
	1250	630<[I_n]≦1250
	1600	800≦[I_n]≦1600
AR220S	400	200≦[I_n]≦400
	800	400<[I_n]≦800
	1000	500<[I_n]≦1000
	1250	630<[I_n]≦1250
	1600	800≦[I_n]≦1600
	2000	1250≦[I_n]≦2000
AR325S	2500	1250≦[I_n]≦2500
AR332S	3200	1600≦[I_n]≦3200
AR440S	4000	2000≦[I_n]≦4000
AR440SB	4000	2000≦[I_n]≦4000
AR440S	4000	2000≦[I_n]≦4000
AR650S	5000	2500≦[I_n]≦5000
AR663S	6300	3200≦[I_n]≦6300

Type	OCR rated primary current [I_{CT}](A)	Applicable range of generator rated current [I_n] (A)
AR212H	200	100≦[I_n]≦200
	400	200<[I_n]≦400
	800	400<[I_n]≦800
	1000	500<[I_n]≦1000
	1250	630<[I_n]≦1250
AR216H	1600	800≦[I_n]≦1600
AR220H	2000	1000≦[I_n]≦2000
AR316H	200	100≦[I_n]≦200
	400	200<[I_n]≦400
	800	400<[I_n]≦800
	1250	630<[I_n]≦1250
	1600	800<[I_n]≦1600
AR320H	2000	1000≦[I_n]≦2000
AR325H	2500	1250≦[I_n]≦2500
AR332H	3200	1600≦[I_n]≦3200
AR420H	800	400≦[I_n]≦800
	2000	1000≦[I_n]≦2000
AR440H	4000	2000≦[I_n]≦4000
AR663H	5000	2500≦[I_n]≦5000
	6300	3200≦[I_n]≦6300

Protection characteristics

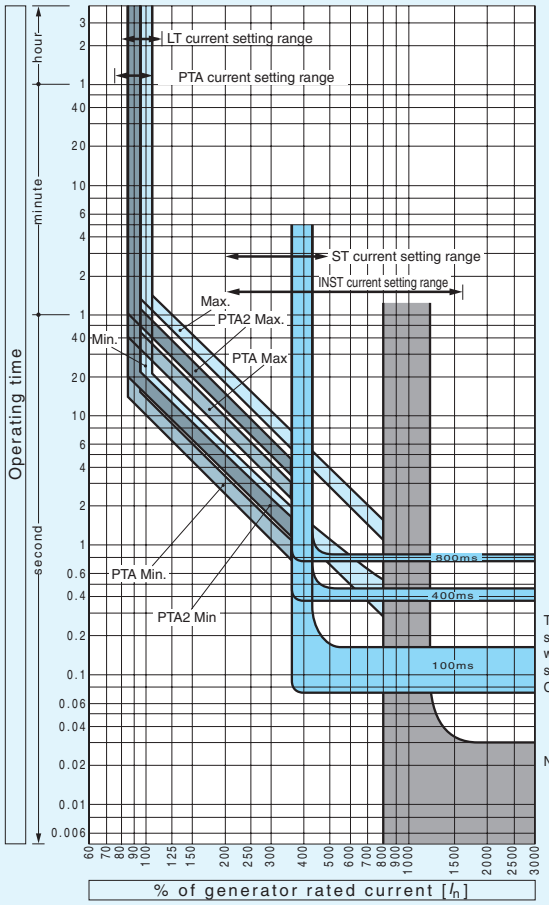

The ST trip characteristic shown in the figure applies when the ramp characteristic select switch is in the OFF position.

Note: Total breaking time for AR6 is 0.05sec.

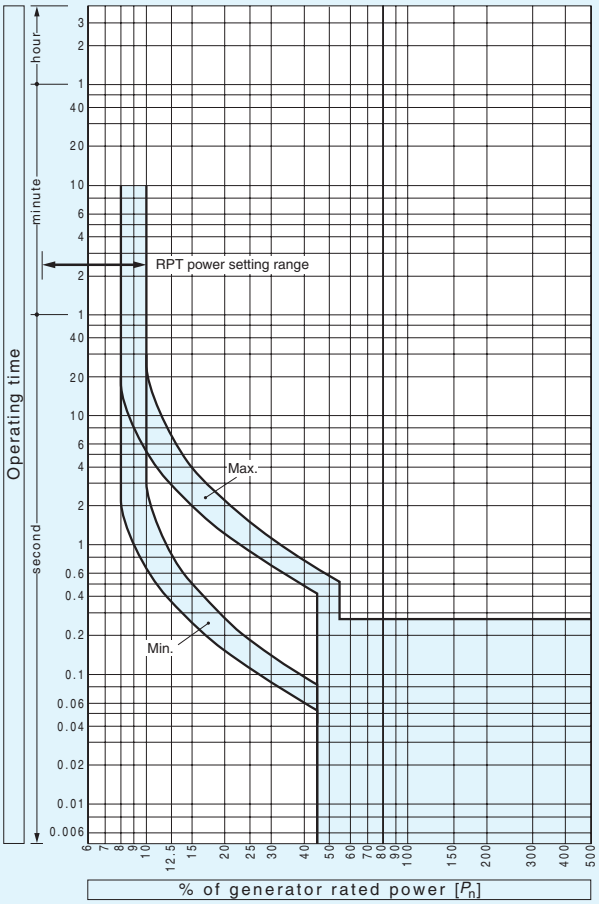

4 Specifications

7 Other Accessories

OCR checker, type ANU-1

The OCR checker allows easy checking of the long time-delay trip, short time-delay trip, instantaneous trip, ground fault trip functions and the pre-trip alarm function of the OCR in the field.

■ Ratings and specifications

Power supply	• AC100–240V, 50/60Hz with type C plug • 4×AA alkaline cells
Power consumption	7VA
Dimensions	101 (W) × 195 (H) × 44 (D) mm
Weight	400 g

■ Measurement output

- Long time delay trip pickup current
- Long time delay trip pickup time
- Short time delay trip pickup current
- Short time delay trip pickup time
- Instantaneous trip pickup current
- MCR trip pickup current
- Ground fault trip pickup current
- Ground fault trip pickup time
- N-phase protection trip pickup current
- N-phase protection trip pickup time
- Pre-trip alarm pickup current
- Pre-trip alarm pickup time

For the checking of Reverse power protection, use the following OCR test interface unit, ANU-2.

OCR test interface unit, type ANU-2

OCR test interface unit ANU-2 is a testing tool designed for checking the functionality of type AGR OCR (overcurrent release). Using this tool in conjunction with a commercial constant-current generator allows easy on-site testing of the OCR. The reverse power trip function of the OCR can also be tested using the tool.
OCR test interface unit ANU-2 is a device that converts current into voltage. In addition to the unit, a constant-current generator is needed to test the OCR. Use a generator with a continuous rating of 5A (50/60Hz) and a short-time rating of 50A (50/60 Hz) for 10 seconds (500 VA).

■ Ratings and Specifications

Power supply	Input	External power supply (through power cable with AC adapter) 100 to 240 VAC (50/60 Hz)
	Output	9 VDC
Power consumption		7VA
Outline dimensions		W160×H90×D220 (mm)
Mass of main unit		2kg

■ Measurement output

- Long time delay trip pickup current
- Short time delay trip pickup current
- Instantaneous trip pickup current *1
- Instantaneous trip operation
- MCR trip pickup current *1
- Ground fault trip pickup current
- N-phase protection trip pickup current
- Pre-trip alarm pickup current *2
- Reverse power protection trip pickup current *4
- Long time delay trip pickup time (simplified testing) *3
- Reverse power protection trip pickup time (simplified testing) *3 *4
- Pre-trip alarm pickup time (simplified testing) *3

■ Accessories

- Power cable with AC adaptor (2m)
- Plug adaptor
- Signal cable (3m)
- Operation manual

*1 Can be measured only when the input current does not exceed 50 A.
*2 Not applicable for types AGR-11 or AGR-11B.
*3 A stopwatch is required for measurement.
*4 Applicable for types AGR-22BS-PR and AGR-31BS-PR only.

Current transformer for neutral line (separate type)

When using a 3-pole ACB with the ground fault protection function to protect a 3-phase, 4-wire system against ground fault, install an appropriate current transformer (CT) to the neutral line of the system.
TERASAKI can provide this neutral line CT as an option.
For the 4-pole ACB, a measuring CT instead of the neutral line CT is already built into the neutral phase of the ACB when the ground fault protection is fitted.

• Outline dimension of CT for neutral line

AR208S, AR212S, AR216S
AR212H, AR216H, AR316H

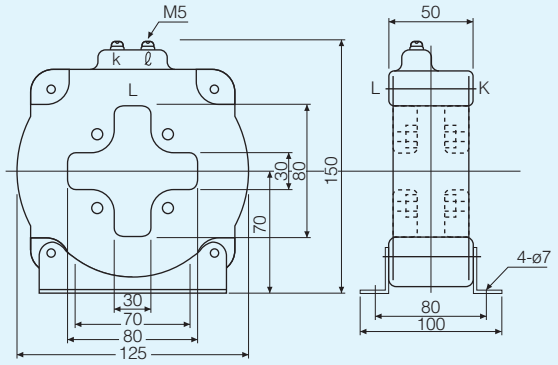

Type	CW80-40LS	
Rated Primary Current (A)	200 400 800	1250 1600

Rated secondary current is 5A

AR220S, AR325S, AR332S, AR440SB, AR440S, AR650S, AR663S
AR220H, AR320H, AR325H, AR332H, AR420H, AR440H, AR663H

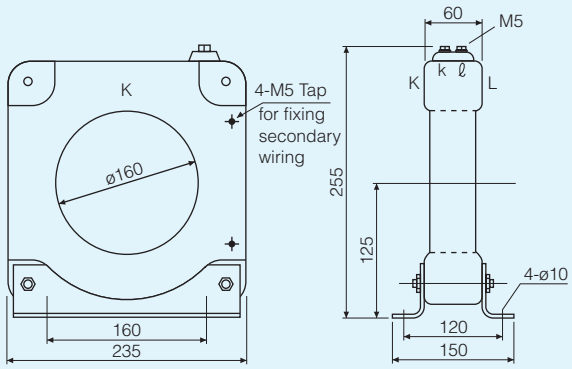

Type	EC160-40LS	
Rated Primary Current (A)	1600 2000 2500 3200	4000 5000 6300

Rated secondary current is 5A

The over-current trip device of *TemPower2* provides a ground fault protection on the line side (optional) as well as on the load side as shown above. When the ACB is used for protection of a 3-pole, 4-wire system, select the same current transformer for the neutral line shown above. Two current transformers are required for 3 pole restricted earth fault ACBs.

4 Specifications

ON–OFF cycle counter

The ON-OFF cycle counter is a mechanical 5-digit readout that shows the number of ON-OFF cycles of the ACB.
Counter readings serve as a guide for maintenance or inspection.

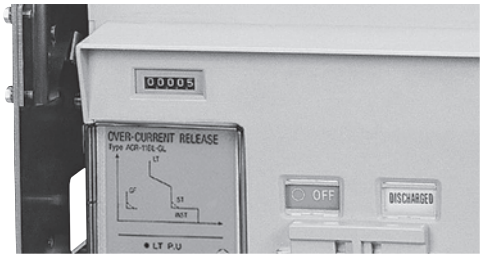

Auxiliary switches

The auxiliary switches operate during the ACB ON/OFF operation.
Connections to the switches are made via screw terminals.
The auxiliary switches for draw-out type ACBs operate in the CONNECTED and TEST positions.
The auxiliary switches for ACBs conforming to classification society's rules operate in the CONNECTED position only.
The auxiliary switches have change-over contacts and are available for general service and for microload.

Type	Normal contacts for general service	Gold contacts for microload ※※
※AXR-004	4c	—
AXR-007	7c	—
AXR-304	4c	3c
AXR-010	10c	—
AXR-307	7c	3c

※The standard contact arrangement of the auxiliary switches is 4c. (Form c: Change-over, single gap, three terminals)

※※Suited to electronic circuits

Note: 4c is the maximum arrangement when any one of the ground fault protection on the line side, zone interlock, or communication function is incorporated or in the case of type AGR-31B OCR with the ground fault trip function incorporated.

Auxiliary switch ratings

Category	For general service		For microload ※※		
Voltage	Resistive load (A)	Inductive load (A) AC: cos ø≧ 0.3 DC: L/R ≦0.01	Resistive load (A)	Inductive load (A) AC: cos ø≧ 0.6 DC: L/R ≦0.007	Min. applicable load
AC100-250V	5	5	0.1	0.1	DC5V 1mA
AC251-500V	5	5	—	—	
DC30V	1	1	0.1	0.1	
DC125-250V	1	1	—	—	

Note 1: The chattering of b-contacts due to ON-OFF operation of the ACB lasts for less than 30 ms.
Note 2: Do not supply different voltages to contacts of a switch.

Trip Indicator

Trip Indicator closes (ON) when the air circuit breaker is tripped by overcurrent release, shunt trip device, undervoltage trip device or manual operation of OFF button. The table summarizes when the trip indicator operates (ON) and when it is reset (OFF). Use a suitable self-hold circuit as necessary for continuous trip alarm indication.

Breker Tripped by	Operation of Trip Indicator	
	Closing Springs Charged	Closing Spring Discharged
Over-current Trip (OCR)	Switch is ON for minimum 40ms, then reset to OFF.	Switch is remains ON until closing springs are charged.
Shunt trip	Switch remains ON until reset to OFF.	Switch remains ON until closing springs springs are charged after rest to OFF.
Undervoltage trip: Remote Opening / Undervoltage Condition	Switch remains ON until undervoltage coil is pick-up voltage.	Switch remains ON until closing springs are charged after undervoltage condition has restored to normal.
Manual Opening by PUSH–TO–OPEN button	Switch remains ON until PUSH–TO–OPEN button is released.	Switch remains ON until closing springs are charged after PUSH–TO–OPEN botton is released.

■ Normal contacts for general service

Voltage (V)		Switch contact ratings	
		Resistive load	Inductive load
AC	250	3	3
DC	250	0.1	0.1
	125	0.5	0.5
	30	3	2

Minimum applicable load is DC24V 10mA.

■ Gold contacts for microload

Voltage (V)		Switch contact ratings	
		Resistive load	Inductive load
AC	250	0.1	0.1
DC	30	0.1	0.1

Minimum applicable load is DC24V 1mA.

"Ready to close" contact (special specification)

The "ready to close" contact indicates that the ACB is in a ready to close status.
This contact operates when the followings are valid.
* ON-OFF indicator shows "OFF". (The ACB is in OFF position)
* Spring charge indicator shows "charged".
* Undervoltage trip is energised.
* Shunt trip is not energised.
* ACB is in the connected or test position.
* Key lock and Key interlock are off.
* Mechanical interlock is off.

■ Normal contacts for general service

Voltage (V)		Switch contact ratings	
		Resistive load	Inductive load
AC	250	3	3
DC	250	0.1	0.1
	125	0.5	0.5
	30	3	2

Minimum applicable load is DC24V 10mA.

■ Gold contacts for microload

Voltage (V)		Switch contact ratings	
		Resistive load	Inductive load
AC	250	0.1	0.1
DC	30	0.1	0.1

Minimum applicable load is DC24V 1mA.

Key lock

The key lock is available in two types: the lock-in ON type that locks the ACB in the closed position, and the lock-in OFF type that locks the ACB in the open position.
When the ACB is fitted with a key lock, the operator cannot operate the ACB unless using a matched key.

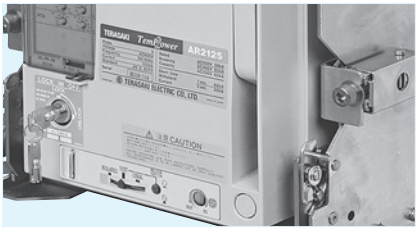

Key interlock

The key interlock is a system of interlocking between ACBs, each fitted with a key lock of lock-in OFF type.
- A key must be inserted to release the lock before the ACB can be closed.
- The ACB must be opened and locked in the OFF position before the key can be removed.

By utilizing the lock-in OFF type key lock feature, and then a limited number of keys by default provides an effective and reliable interlock system.
Using the same keys also allows interlocking between an ACB and other devices (such as a switchboard door).
ACBs can be supplied with a cylinder lock or type FS-2 Castell lock (with an angular movement 90° clockwise to trap key).
A double Castell interlocking facility suitable for applications such as UPS systems is available as a special specification contact Terasaki Electric Europe, UK.
Facility or full option including locks are available, please specify.
For other lock types contact Terasaki Electric Europe, UK.

Example: Interlock for prevention of parallel feeding from two sources

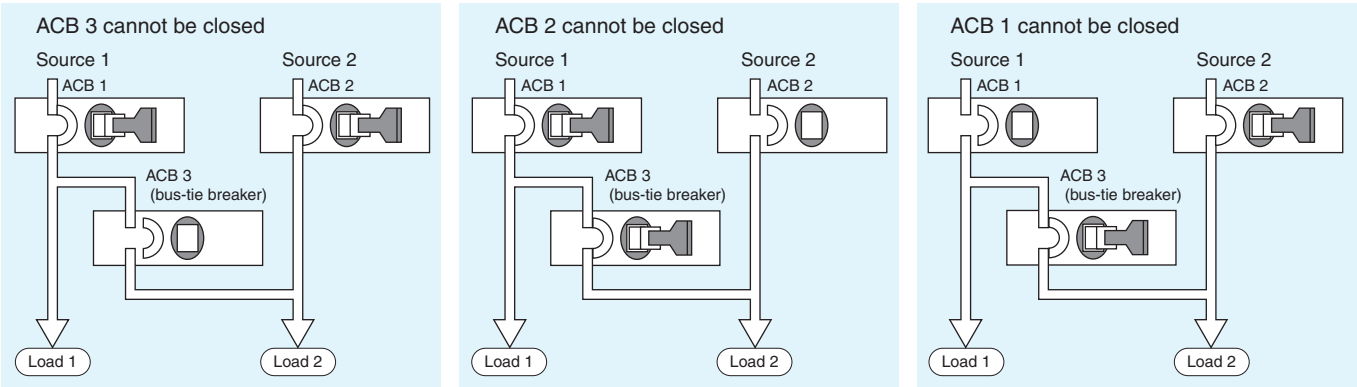

4 Specifications

Mechanical interlock (Contact TERASAKI for details)

Mechanical interlocks for interlocking 2 or 3 ACBs in either horizontal or vertical arrangements are available.
Interlocking is possible between any frame size within the *TemPower2* range.
In conjunction with an electrical interlock, it will enhance safety and reliability of power distribution systems.

1 Horizontal type

This table shows the standard pitch between left side ACB ① and right side ACB ②, or between left side ACB ② and right side ACB ③.

		Pitch of ACB P (mm) (PC line to PC line)			
Left ACB \ Right ACB		AR208S～AR220S AR212H～AR220H	AR325S～AR332S AR316H～AR332H AR440SB	AR440S AR420H～AR440H (3P only)	AR650S～AR663S AR663H
		3P, 4P	3P, 4P	3P, 4P	3P, 4P
AR208S～AR220S AR212H～AR220H	3P	600, 700, 800	600, 700, 800	600, 700, 800	800, 1000, 1100
	4P	600, 700, 800, 900	700, 800, 900	600, 700, 800, 900	900, 1000, 1100
AR325S～AR332S AR316H～AR332H AR440SB	3P	600, 700, 800, 900	700, 800, 900	600, 700, 800, 900	900, 1000, 1100
	4P	700, 800, 900, 1000	800, 900, 1000	700, 800, 900, 1000	1000, 1100, 1200
AR440S AR420H～AR440H (3P only)	3P	800, 900, 1000, 1100	900, 1000, 1100	800, 900, 1000, 1100	1100, 1200, 1300
	4P	1000, 1100, 1200, 1300	1000, 1100, 1200, 1300	1000, 1100, 1200, 1300	1300, 1400
AR650S～AR663S AR663H	3P	700, 800, 900, 1000	800, 900, 1000	700, 800, 900, 1000	1000, 1100, 1200
	4P	1000, 1100, 1200	1000, 1100, 1200	1000, 1100, 1200	1200, 1300, 1400

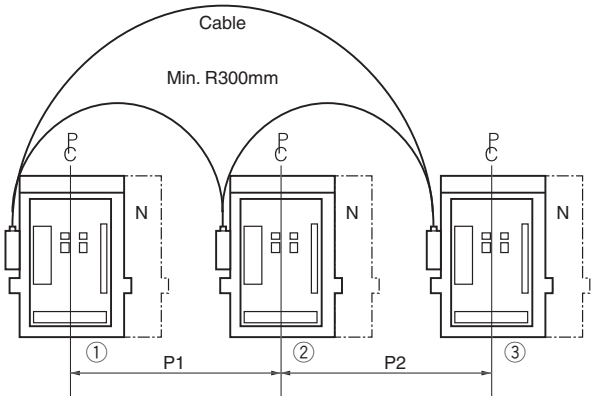

To order, select the required pitch for P1 and P2 from the above table, and specify the type and number of poles for each ACB.

Example,

P1: 700 mm
P2: 800 mm
ACB ①: Type AR212H 3 poles
ACB ②: Type AR332H 3 poles
ACB ③: Type AR216H 3 poles

Types and Operations

Type	Operation Br1	Br2	Br3	Remark
Type C 1 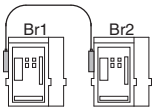	ON	OFF		One of two breakers can be turned on.
	OFF	ON		
	OFF	OFF		
Type B 2 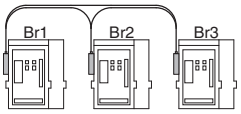	ON	ON	OFF	One or two of three breakers can be turned on.
	ON	OFF	ON	
	OFF	ON	ON	
	ON	OFF	OFF	
	OFF	ON	OFF	
	OFF	OFF	ON	
	OFF	OFF	OFF	
Type D 3 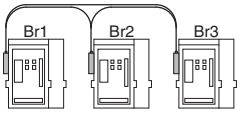	ON	OFF	OFF	One of three breakers can be turned on.
	OFF	ON	OFF	
	OFF	OFF	ON	
	OFF	OFF	OFF	
Type A 4 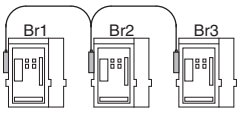	ON	OFF	ON	Br2 is interlocked with both Br1 and Br3.
	ON	OFF	OFF	
	OFF	ON	OFF	
	OFF	OFF	ON	
	OFF	OFF	OFF	

- Interlock is enabled in the CONNECTED position. When the breaker body is in the TEST, ISOLATED or DRAW-OUT position, interlock is disabled.
- If all of two or three breakers receive a closing (on) signal, they all will turn off. This case, however, involves momentary continuity between the main circuit and the auxiliary switch a-contact in all the breakers.
- The body of a draw-out type breaker, as long as it is off (open), can be drawn out or inserted, irrespective of the state of other breakers. (Do not draw out or insert a breaker body during cable installation, adjustment or operation check).

2 Vertical Type

Minimum pitch (550mm) is possible.
Specify the reguired pitch when ordering.
Maximum is 1200mm.

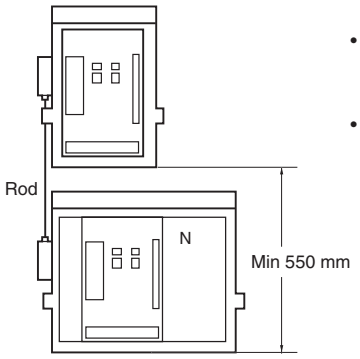

Lifting plate

Lifting plates are detachable tools that can be used to lift a breaker body out of a draw-out cradle.

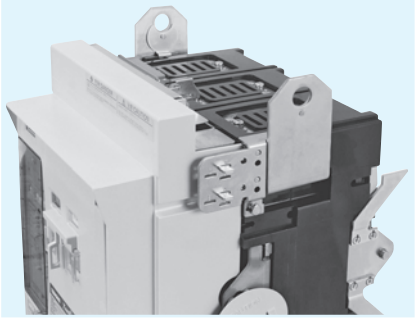

ON-OFF button cover ※

※: Standard equipment

An ON-OFF button cover prevents inadvertent or unauthorized operation of the ON or OFF button. It can be locked with up to three padlocks with ø6 hasp. Padlocks are not supplied.

Control circuit terminal cover

A control circuit terminal cover protects the terminal blocks for auxiliary switches, position switches, and control circuits from being accidentally touched, thus enhancing safety.

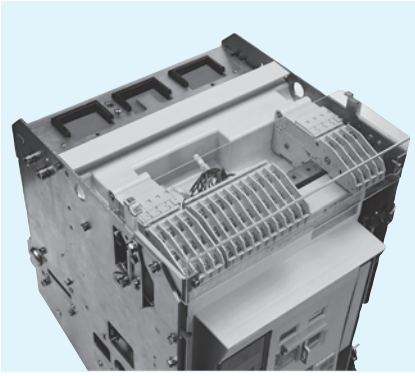

Door flange

A door flange can be used as a decoration panel that covers the cutout on the switchboard panel, and provides IP20 protection. For IP31 protection please specify the door flange with a gasket.

Note: Door flange can not be fitted with IP cover.

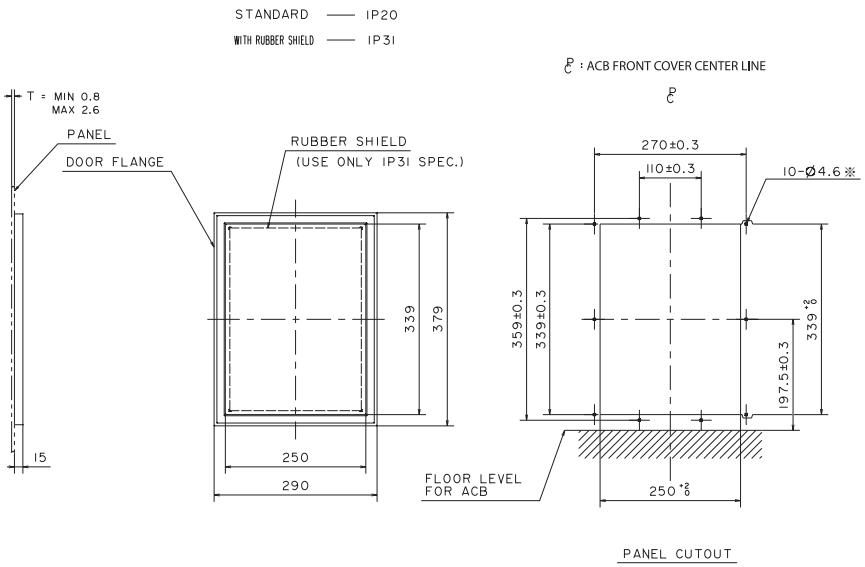

※ : Mount IP20 door flange through 6 mounting holes and IP31 door flange through 10 mounting holes.

4 Specifications

OFF padlock (OFA)

Permits the ACB to be padlocked in the OFF position. Max. three padlocks with ø6 hasp can be fitted. Padlocking is possible only when ON-OFF indicator shows OFF. When the ACB is padlocked in the OFF position both manual and electrial closing become inoperative, but the charging of the closing spring by manual or motor is still possible.

Note1: OFF padlock facility cannot be fitted with key lock or key interlock.

Inter-pole barrier

An inter-pole barrier prevents a possible short-circuit due to foreign objects entering between the poles of the main circuit terminals or between the line and load ends, thus enhancing operational reliability of the ACB.

This barrier can be applied to the draw-out type ACB with vertical terminals or horizontal terminals.

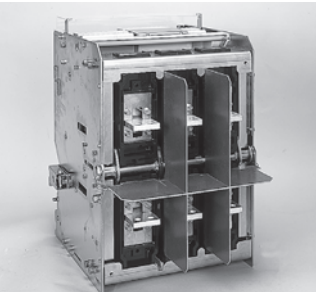

Compatible with IEC61439-2 Form 4

All the models of TemPower2, except for Model AR440SB, comply as standard with Form 4 specified in IEC61439-2.

The AR440SB can be customized to comply with Form 4.

Earthing device

There is a growing demand in L.V. distribution for greater protection against electric shock particularly during periods when maintenance work is being carried out on the main busbars or cables. A safe and economical way to meet this requirement is to apply system earthing via the normal service breaker. Earthing devices on *TemPower2* ACBs comprises; Permanent parts which are factory fitted by Terasaki and are mounted on the ACB chassis and body to enable the ACB to receive the portable parts. Portable parts are supplied in loose kit form and are fitted on to the ACB body by the customer's engineer. This converts the ACB from a normal service device to an earthing device.

When the ACB is converted to the earthing device mode, the over-current release and the other electrical tripping devices are automatically disabled to prevent the remote opening of the ACB.

It is recommended that the ON-OFF operating buttons be padlocked to prevent manual opening of the ACB when used in the earthing mode.

Note: UVT function can not be applied to the earthing device.
Earthing device is not avilable for AR6.

For further information contact Terasaki for details.

IP cover

An IP cover provides an IP55 grade of protection as defined in IEC 60529. Even if the breaker body is on the ISOLATED position, IP cover can still be fitted on the ACB.

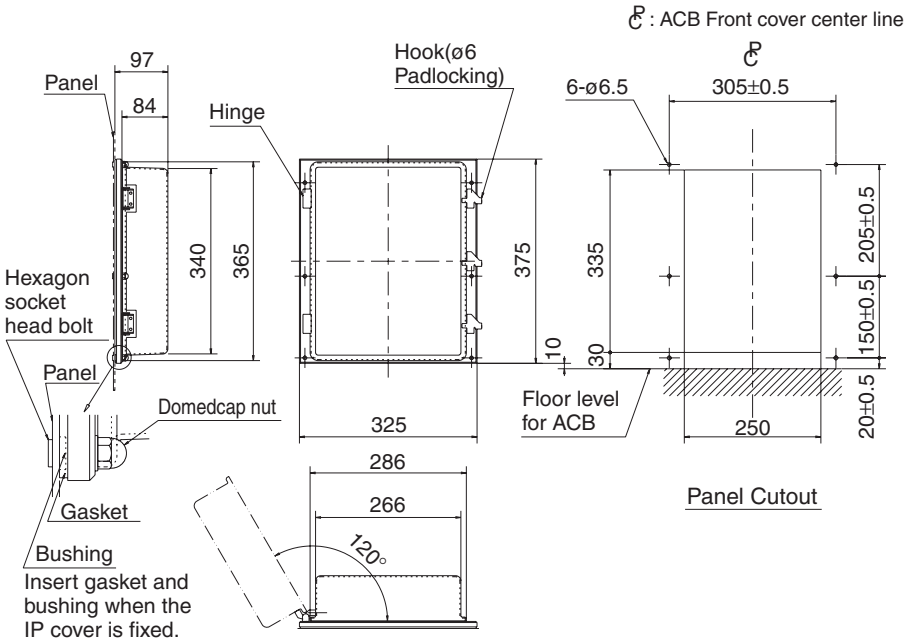

8 Operation Environments

Standard environment

The standard environment for ACBs is as follows:

Ambient temperature	Min. permissible storage temperature –20°C Max. permissible storage temperature +60°C No condensation Min. permissible operating temperature –5°C Max. permissible operating temperature +40°C The average temperature for 24 hours must not exceed 35°C.
Relative humidity	Below 85%
Attitude	Below 2000 m
Atmosphere	Excessive water vapor, oil vapor, smoke, dust, or corrosive gases must not exist. Sudden change in temperature, condensation, or icing must not occur.
Vibration	The TemPower 2 ACB is designed to withstand electromagnetic and mechanical vibrations in accordance to IEC 68-2-6. (2-13.2 Hz with amplitude of +/- 1mm; 13.2 to 100Hz with an acceleration of 0.7g).

Special environment

Tropicalization (Fungus and moisture treatment)

Specify this treatment when the ACB is used under high-temperature and high-humidity conditions.

Conditions: Max. permissible ambient temperature 60°C
Max. permissible humidity 95% rel.
No condensation

Cold climate treatment

Specify this treatment when the ACB is used in cold areas.

Conditions: Min. permissible storage temperature –40°C
Max. permissible storage temperature +60°C
Min. permissible operating temperature –25°C
Max. permissible operating temperature +40°C
No condensation

Anti-corrosion treatment

Specify this treatment when the ACB is used in a corrosive atmosphere.

Contact Terasaki for details.

5 Outline Dimensions

• Type AR208S, AR212S, AR216S, AR220S, AR212H, AR216H, AR220H Draw-out type

℄: ACB Front cover center line

Terminal size

Type	ⓣ1	ⓣ2	ⓣ3	W
AR208S	10	10	15	17.5
AR212S	10	10	15	17.5
AR216S	20	15	25	22.5
AR220S	20	15	25	——
AR212H	20	15	——	——
AR216H	20	15	——	——
AR220H	20	15	——	——

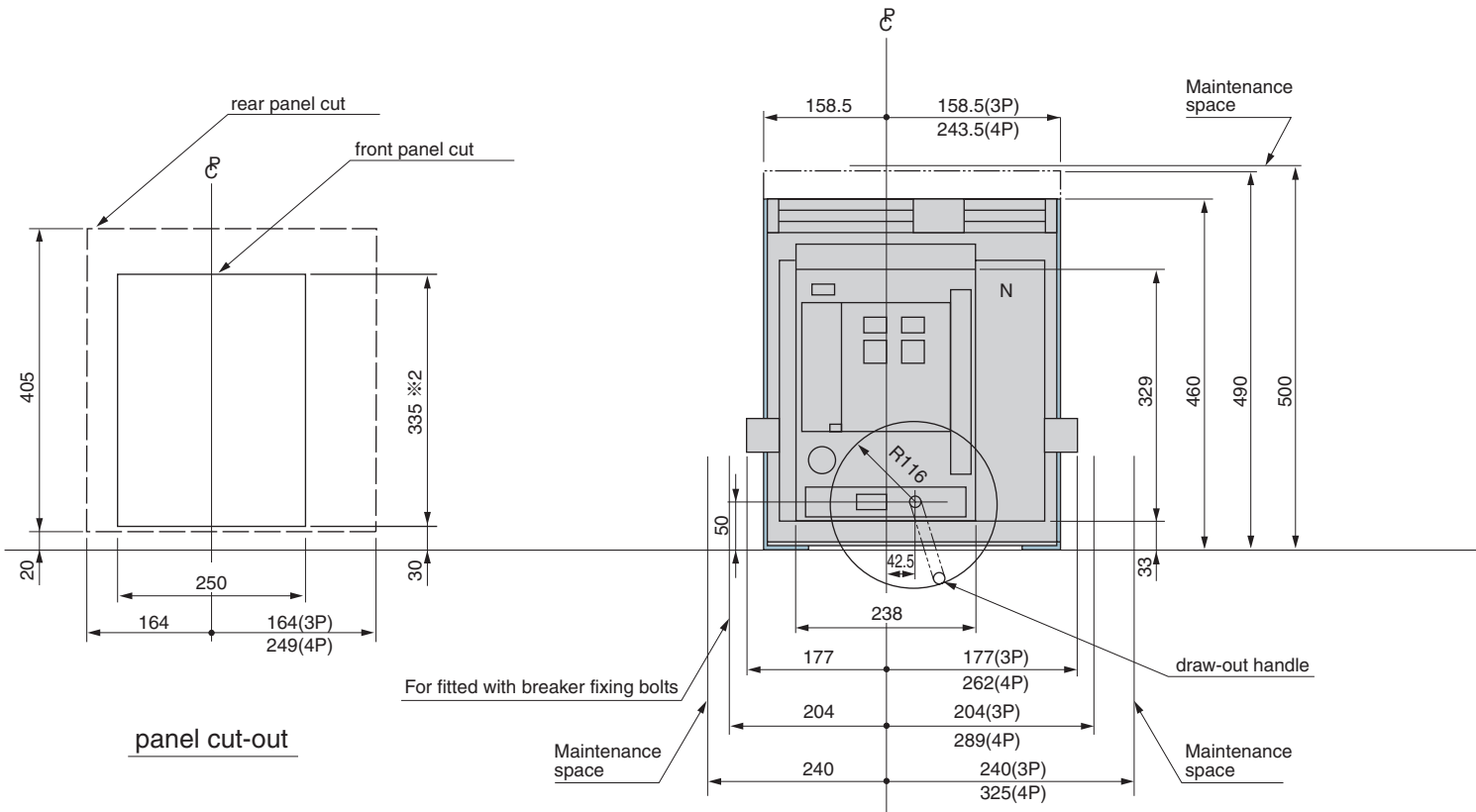

panel cut-out

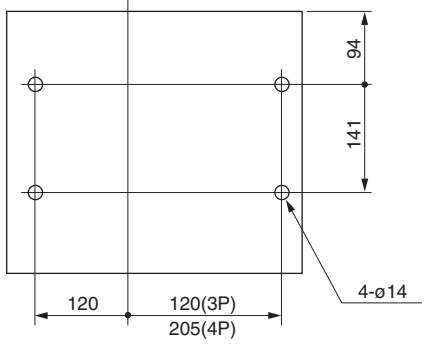

Mounting holes

※1: Conductors including connecting bolts should be separated min. 7mm from Draw-out arm.

※2: Panel cut should be 339 mm not 335 mm when the door flange is used. Refer to page 41.

- N represents the neutral pole of 4-pole ACBs. The neutral pole is positioned to the right as standard when viewed from the front of the ACB. However, the neutral pole can be customized so that it is positioned to the left.
- For High fault series vertical terminal is standard and horizontal terminal is optional, and front connection is not available.
- The vertical terminal for the main circuit with its length extended by 70 mm from the standard is specially available on request.
- For the outline drawing for the version with earth leakage tripping, contact us.

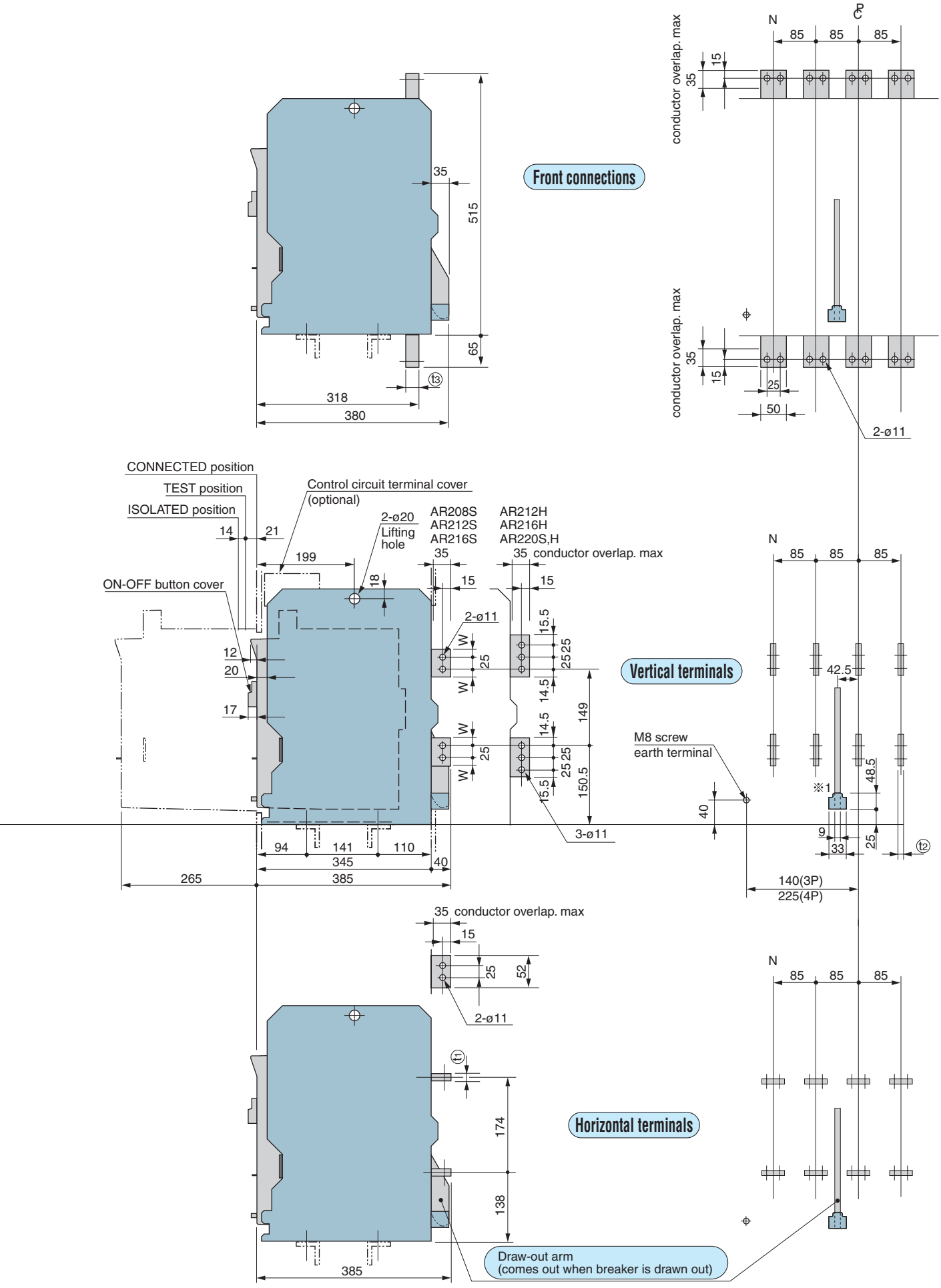
Front connections
Vertical terminals
Horizontal terminals
CONNECTED position
TEST position
ISOLATED position
ON-OFF button cover
Control circuit terminal cover
(optional)
2-ø20
Lifting
hole
AR208S
AR212S
AR216S
AR212H
AR216H
AR220S,H
35 conductor overlap. max
conductor overlap. max
2-ø11
3-ø11
M8 screw
earth terminal
140(3P)
225(4P)
Draw-out arm
(comes out when breaker is drawn out)
N
P
C

5 Outline Dimensions

• Types: AR208S, AR212S, AR216S, AR220S, AR212H, AR216H, AR220H Fixed type

℄: ACB Front cover center line

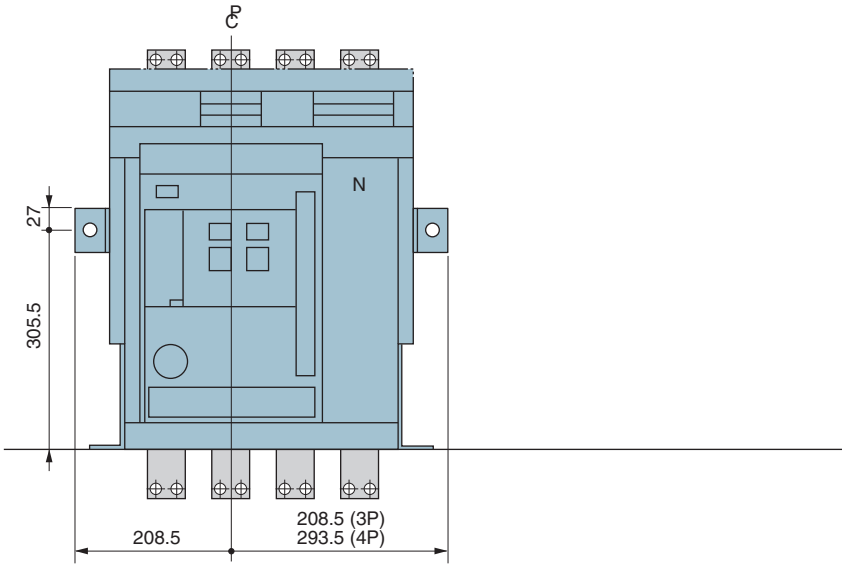

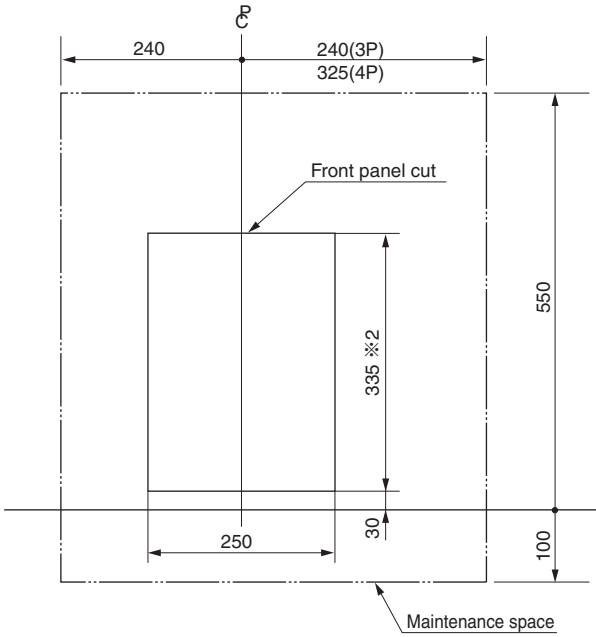

Panel cutout

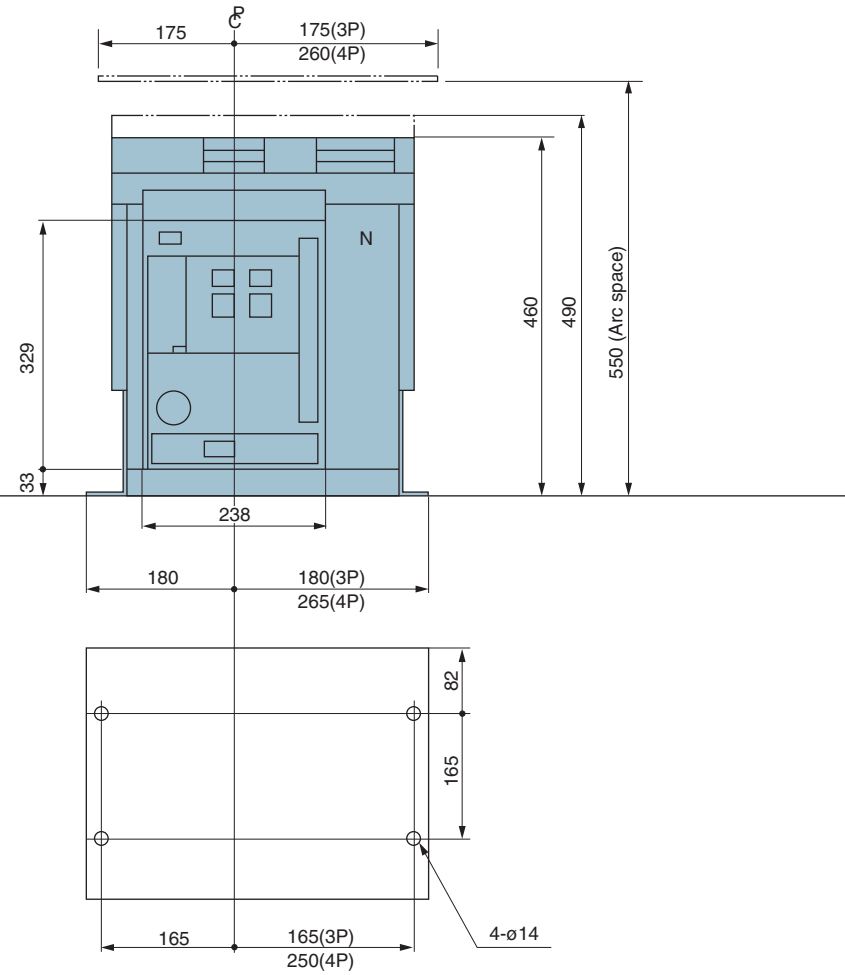

Mounting holes

Terminal size

Type	t_1	t_2	t_3	W
AR208S	10	10	15	17.5
AR212S	10	10	15	17.5
AR216S	20	15	25	22.5
AR220S	20	15	25	—
AR212H	20	15	—	—
AR216H	20	15	—	—
AR220H	20	15	—	—

※2: Panel cut should be 339 mm not 335 mm when the door flange is used. Refer to page 41.

- N represents the neutral pole of 4-pole ACBs.
  The neutral pole is positioned to the right as standard when viewed from the front of the ACB. However, the neutral pole can be customized so that it is positioned to the left.
- For type AR-H high fault series, vertical terminals are standard, horizontal terminals are optional and front connections are not available.
- For the outline drawing for the version with earth leakage tripping, contact us.

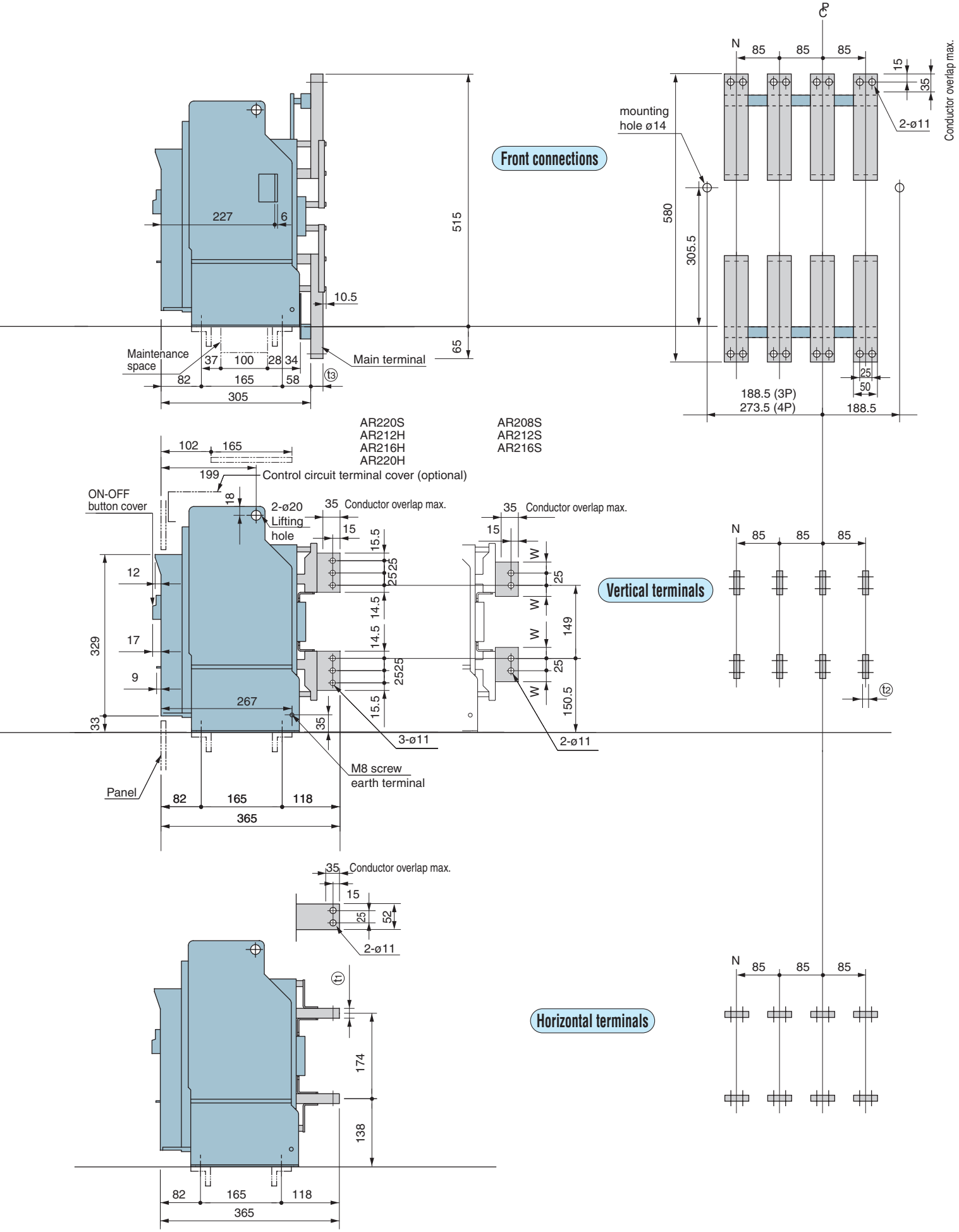
Front connections
Vertical terminals
Horizontal terminals
AR220S
AR212H
AR216H
AR220H
AR208S
AR212S
AR216S
Control circuit terminal cover (optional)
ON-OFF button cover
2-ø20 Lifting hole
Conductor overlap max.
mounting hole ø14
2-ø11
3-ø11
M8 screw earth terminal
Panel
Maintenance space
Main terminal
188.5 (3P)
273.5 (4P)
188.5
365
305

5 Outline Dimensions

• Type AR325S, AR332S, AR316H, AR320H, AR325H, AR332H Draw-out type

℄: ACB Front cover center line

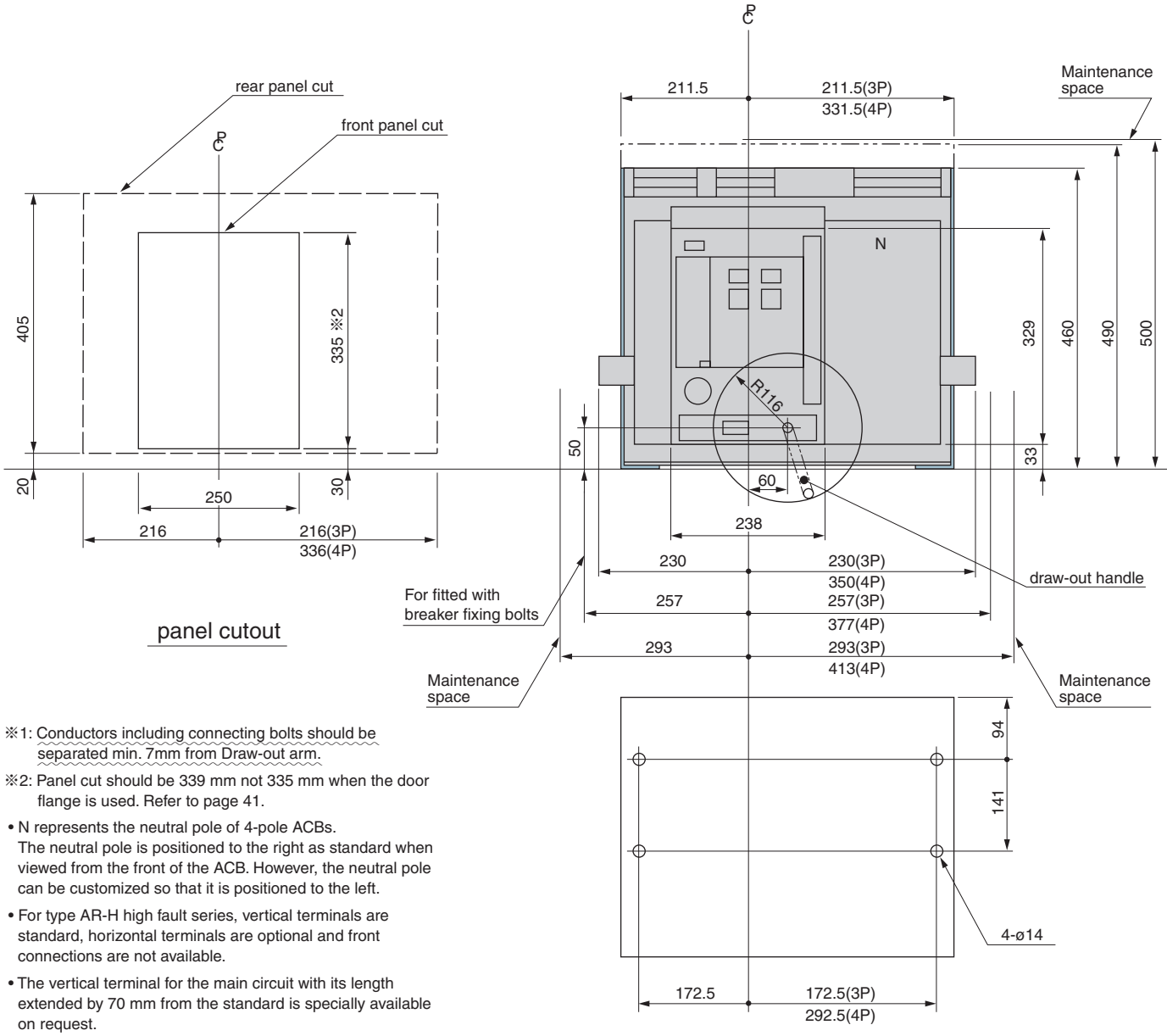

※1: Conductors including connecting bolts should be separated min. 7mm from Draw-out arm.

※2: Panel cut should be 339 mm not 335 mm when the door flange is used. Refer to page 41.

- N represents the neutral pole of 4-pole ACBs. The neutral pole is positioned to the right as standard when viewed from the front of the ACB. However, the neutral pole can be customized so that it is positioned to the left.
- For type AR-H high fault series, vertical terminals are standard, horizontal terminals are optional and front connections are not available.
- The vertical terminal for the main circuit with its length extended by 70 mm from the standard is specially available on request.
- For the outline drawing for the version with earth leakage tripping, contact us.

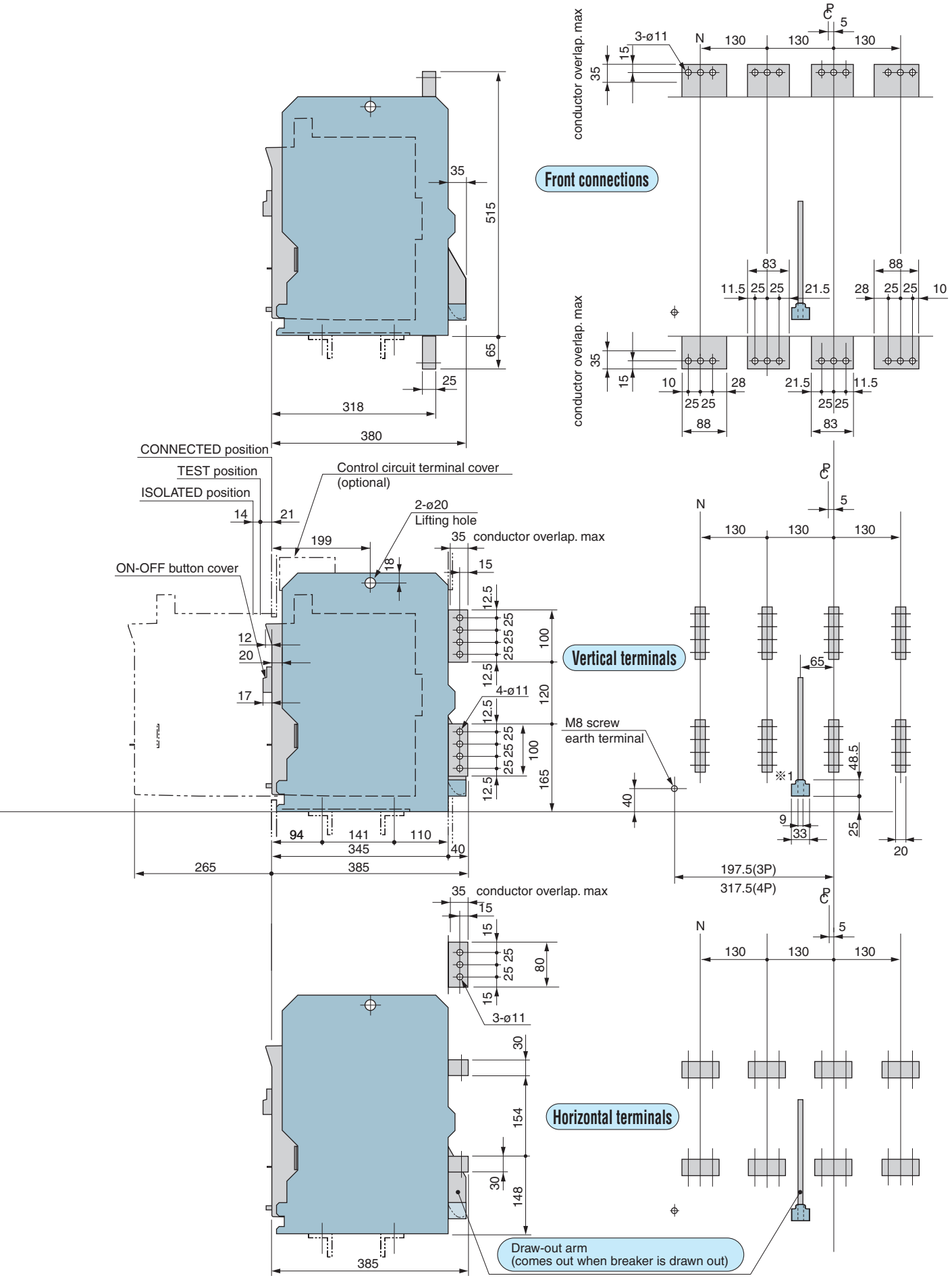
Front connections
Vertical terminals
Horizontal terminals
conductor overlap. max
3-ø11
N
P
C
130
5
35
15
515
65
25
318
380
83
88
11.5
21.5
28
10
CONNECTED position
TEST position
ISOLATED position
Control circuit terminal cover
(optional)
2-ø20
Lifting hole
ON-OFF button cover
14
21
199
18
12
20
17
12.5
100
120
165
4-ø11
M8 screw
earth terminal
40
48.5
9
33
94
141
110
345
265
385
197.5(3P)
317.5(4P)
30
154
148
Draw-out arm
(comes out when breaker is drawn out)

5 Outline Dimensions

• Types: AR325S, AR332S, AR316H, AR320H, AR325H, AR332H Fixed type

℄: ACB Front cover center line

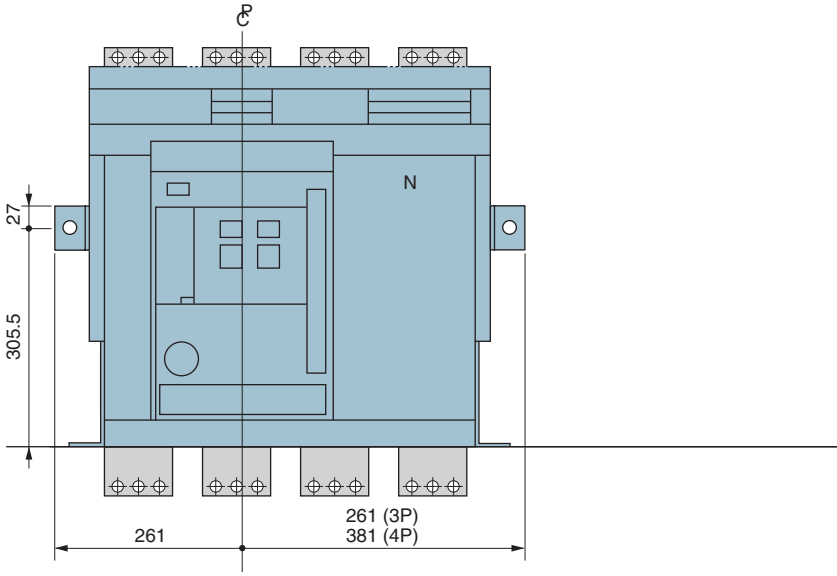

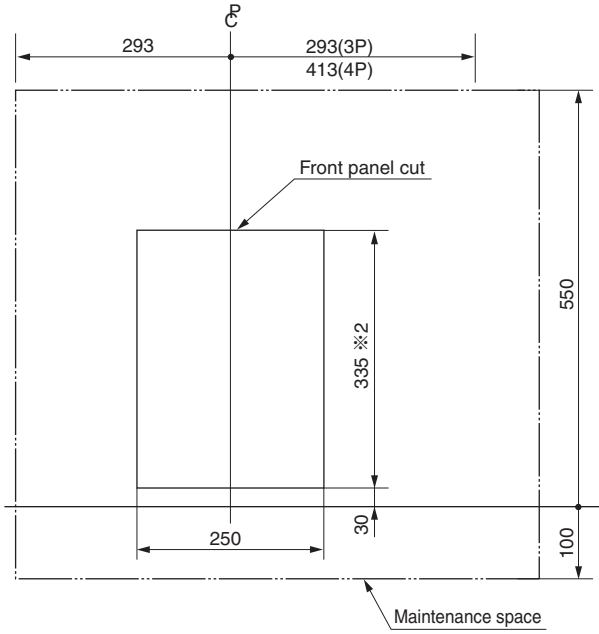

Panel cutout

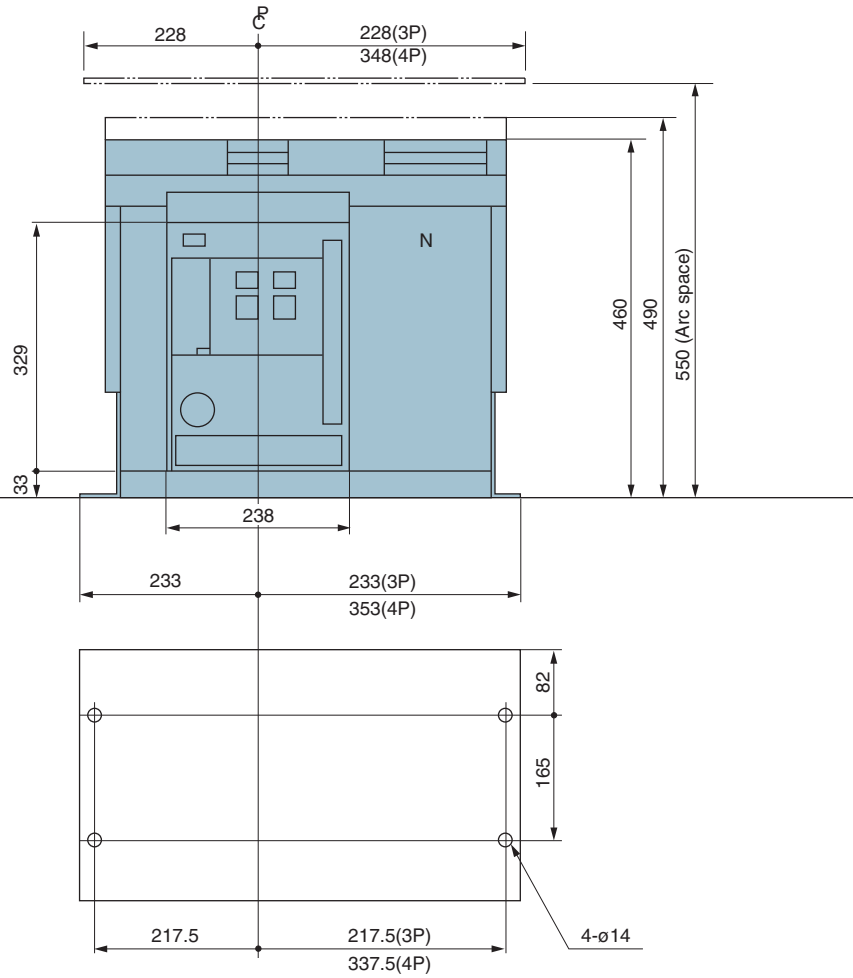

Mounting holes

※2: Panel cut should be 339 mm not 335 mm when the door flange is used. Refer to page 41.

- N represents the neutral pole of 4-pole ACBs. The neutral pole is positioned to the right as standard when viewed from the front of the ACB. However, the neutral pole can be customized so that it is positioned to the left.
- For type AR-H high fault series, vertical terminals are standard, horizontal terminals are optional and front connections are not available.
- For the outline drawing for the version with earth leakage tripping, contact us.

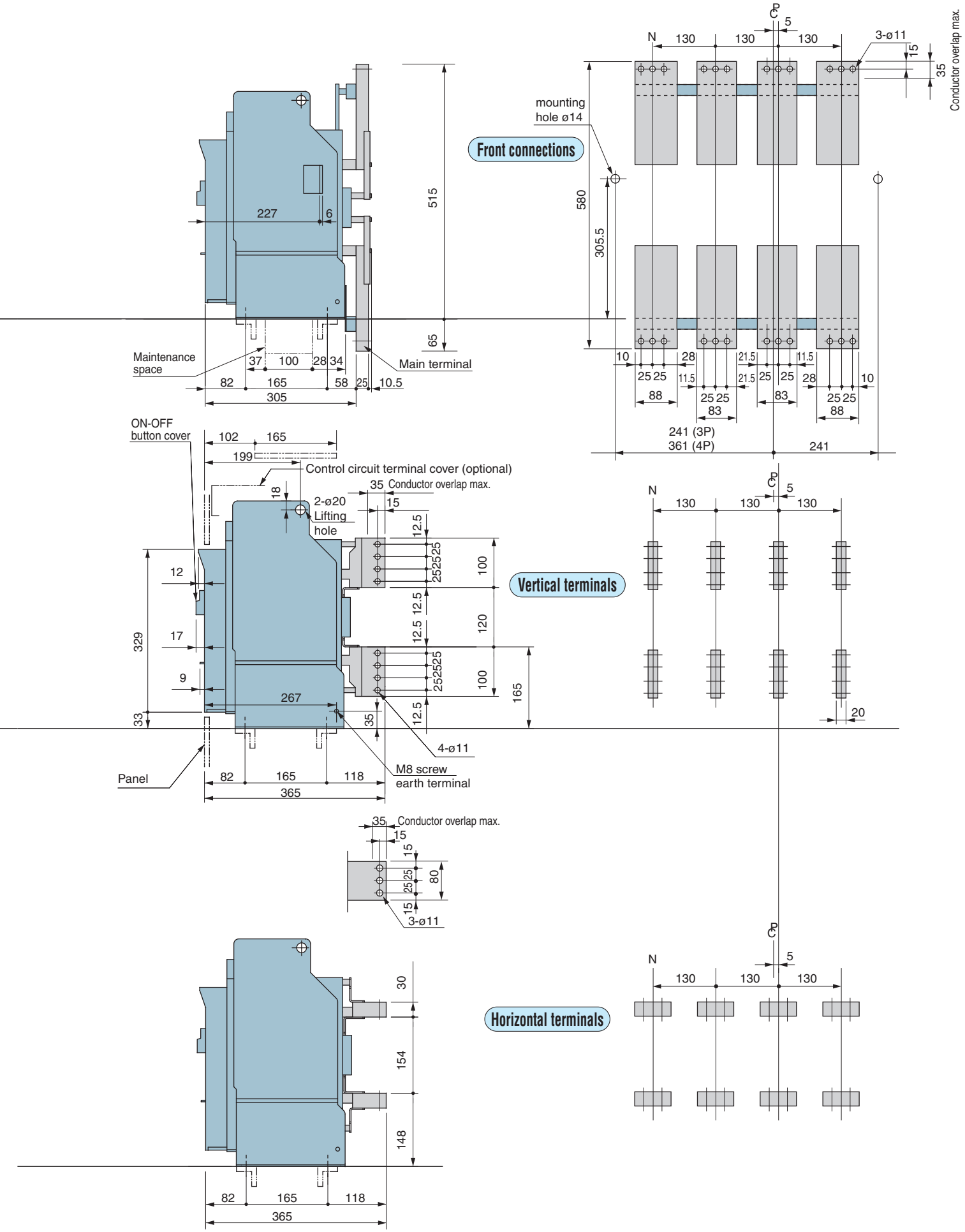
Front connections
Vertical terminals
Horizontal terminals
Maintenance space
Main terminal
mounting hole ø14
Conductor overlap max.
3-ø11
ON-OFF button cover
Control circuit terminal cover (optional)
2-ø20 Lifting hole
Panel
4-ø11
M8 screw earth terminal
241 (3P)
361 (4P)
N
P
C

5 Outline Dimensions

• Types: AR440SB Draw-out type

℄: ACB Front cover center line

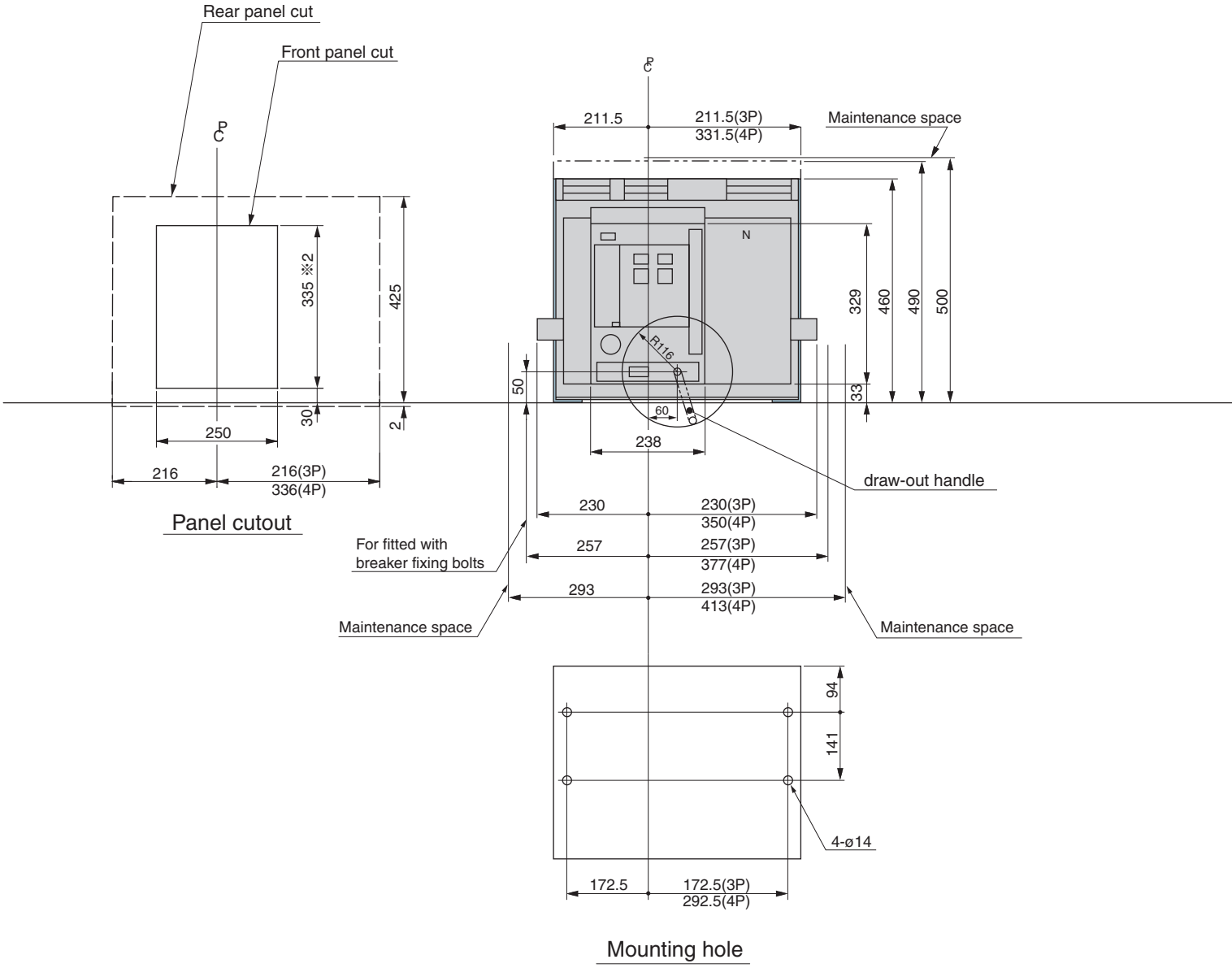

※2: Panel cut should be 339 mm not 335 mm when the door flange is used. Refer to page 41.

• N represents the neutral pole of 4-pole ACBs.

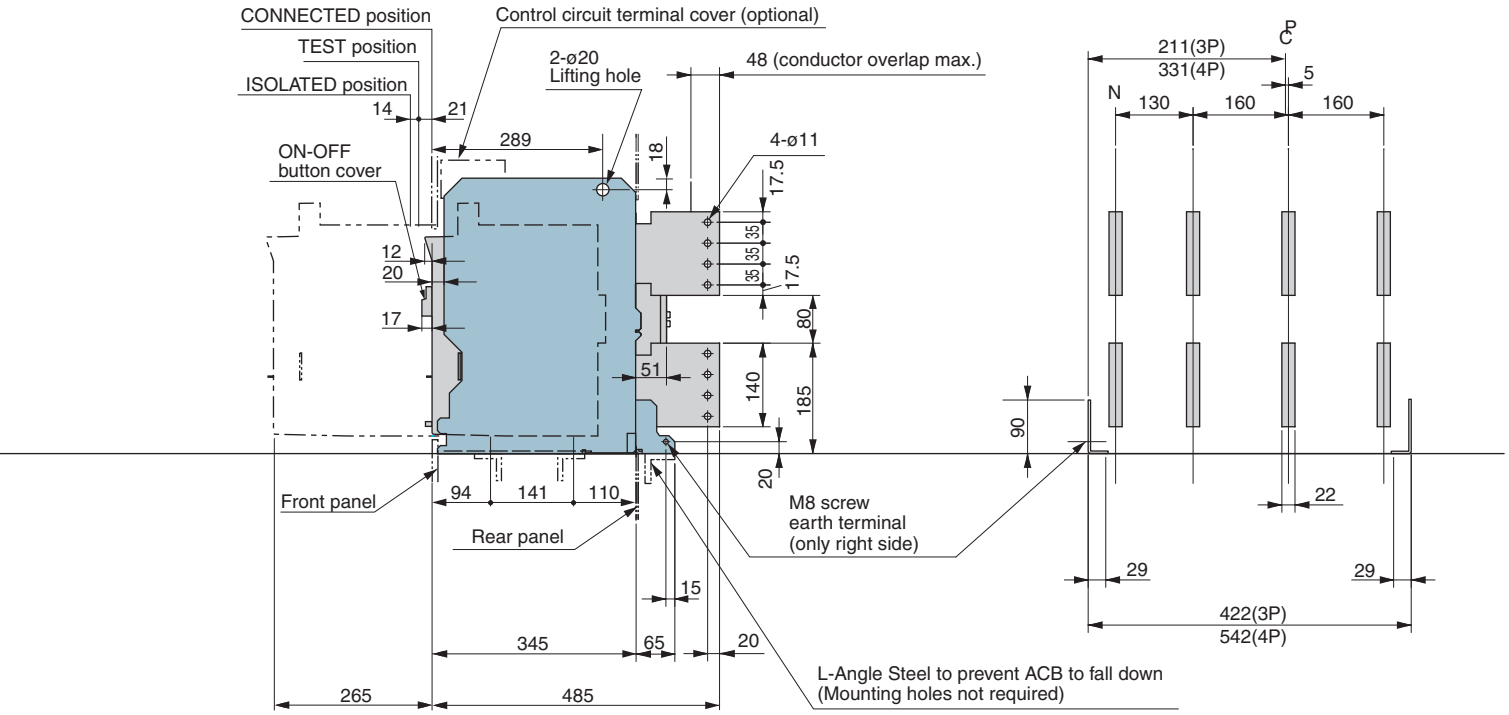
CONNECTED position
TEST position
ISOLATED position
Control circuit terminal cover (optional)
2-ø20
Lifting hole
48 (conductor overlap max.)
ON-OFF
button cover
4-ø11
14
21
289
18
17.5
35
35
35
17.5
12
20
17
80
51
140
185
90
20
Front panel
94
141
110
Rear panel
M8 screw
earth terminal
(only right side)
15
345
65
20
265
485
L-Angle Steel to prevent ACB to fall down
(Mounting holes not required)
P
C
211(3P)
331(4P)
5
N
130
160
160
22
29
29
422(3P)
542(4P)

5 Outline Dimensions

• Types: AR440S, AR420H (3 poles only), AR440H (3 poles only) Draw-out type

P/C: ACB Front cover center line

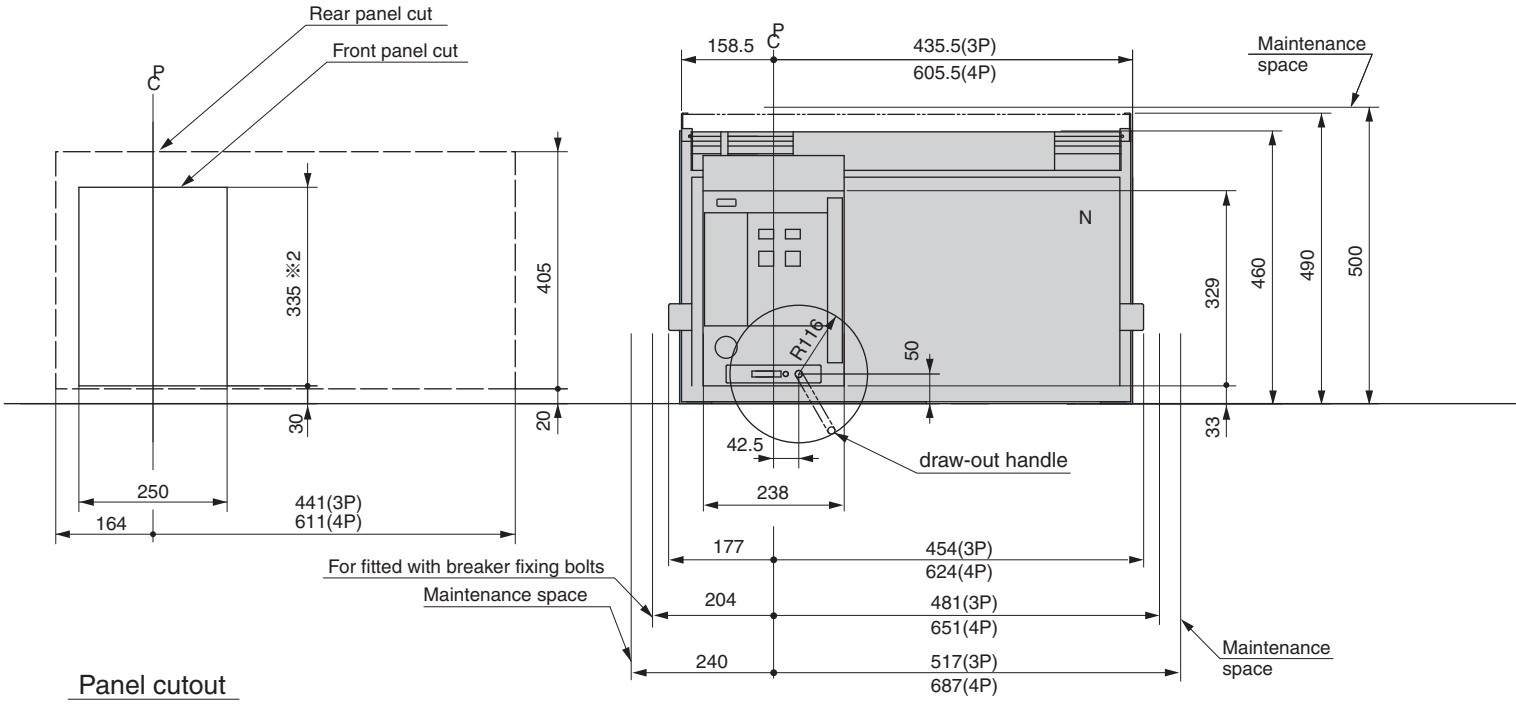

※1: Conductors including connecting bolts should be separated min. 7mm from Draw-out arm.

※2: Panel cut should be 339 mm not 335 mm when the door flange is used. Refer to page 41.

• N represents the neutral pole of 4-pole ACBs.

• AR420H and AR440H are 3 poles only.

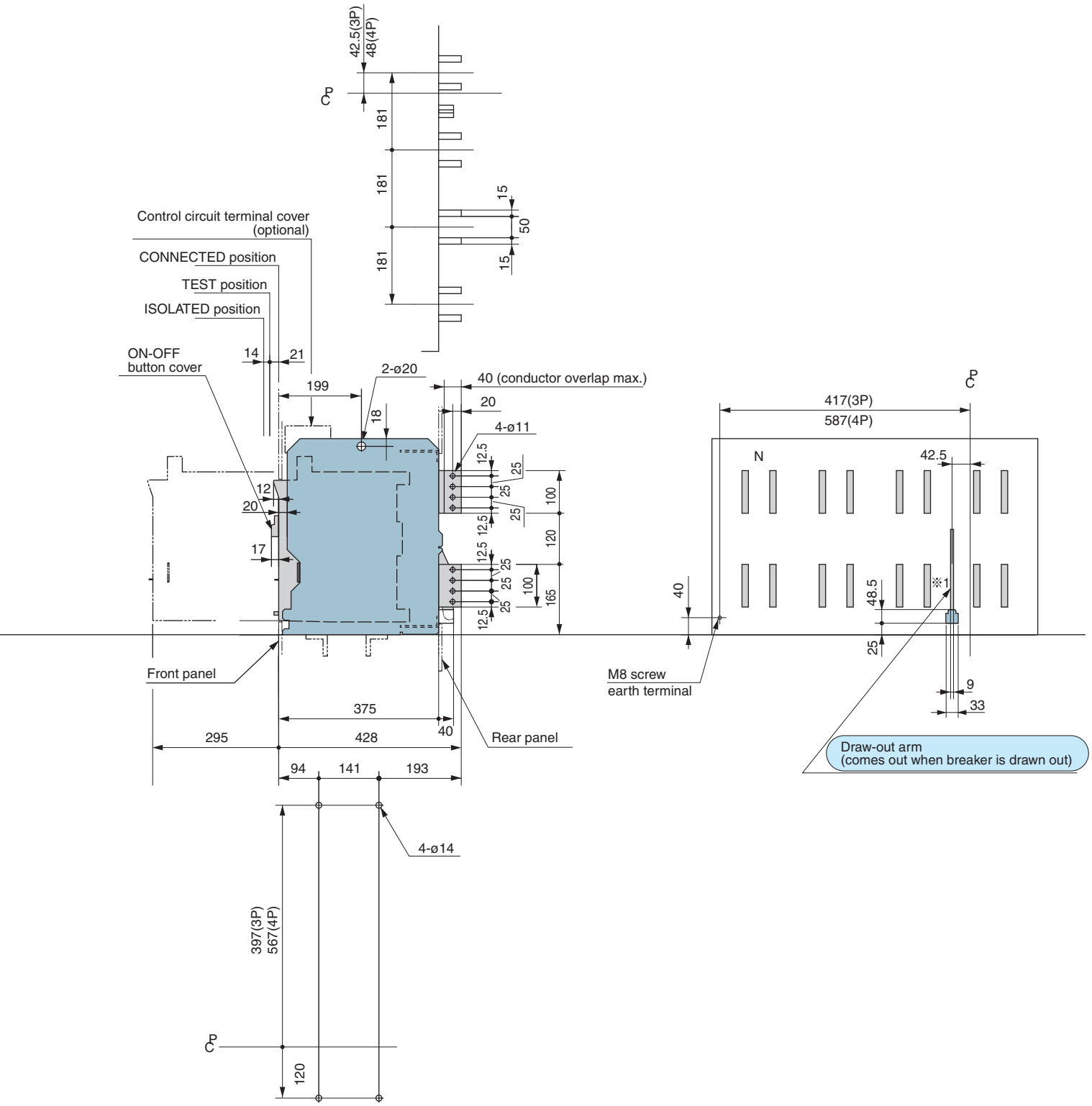
42.5(3P)
48(4P)
P
C
181
181
181
15
50
15
Control circuit terminal cover
(optional)
CONNECTED position
TEST position
ISOLATED position
ON-OFF
button cover
14
21
199
2-ø20
18
40 (conductor overlap max.)
20
4-ø11
12.5
25
25
25
100
12.5
120
12.5
25
25
25
100
165
12.5
25
12
20
17
Front panel
375
295
428
40
Rear panel
94
141
193
4-ø14
397(3P)
567(4P)
P
C
120
417(3P)
587(4P)
P
C
N
42.5
40
48.5
※1
25
M8 screw
earth terminal
9
33
Draw-out arm
(comes out when breaker is drawn out)

5 Outline Dimensions

• Types: AR650S, AR663S AR663H Draw-out type

℄: ACB Front cover center line

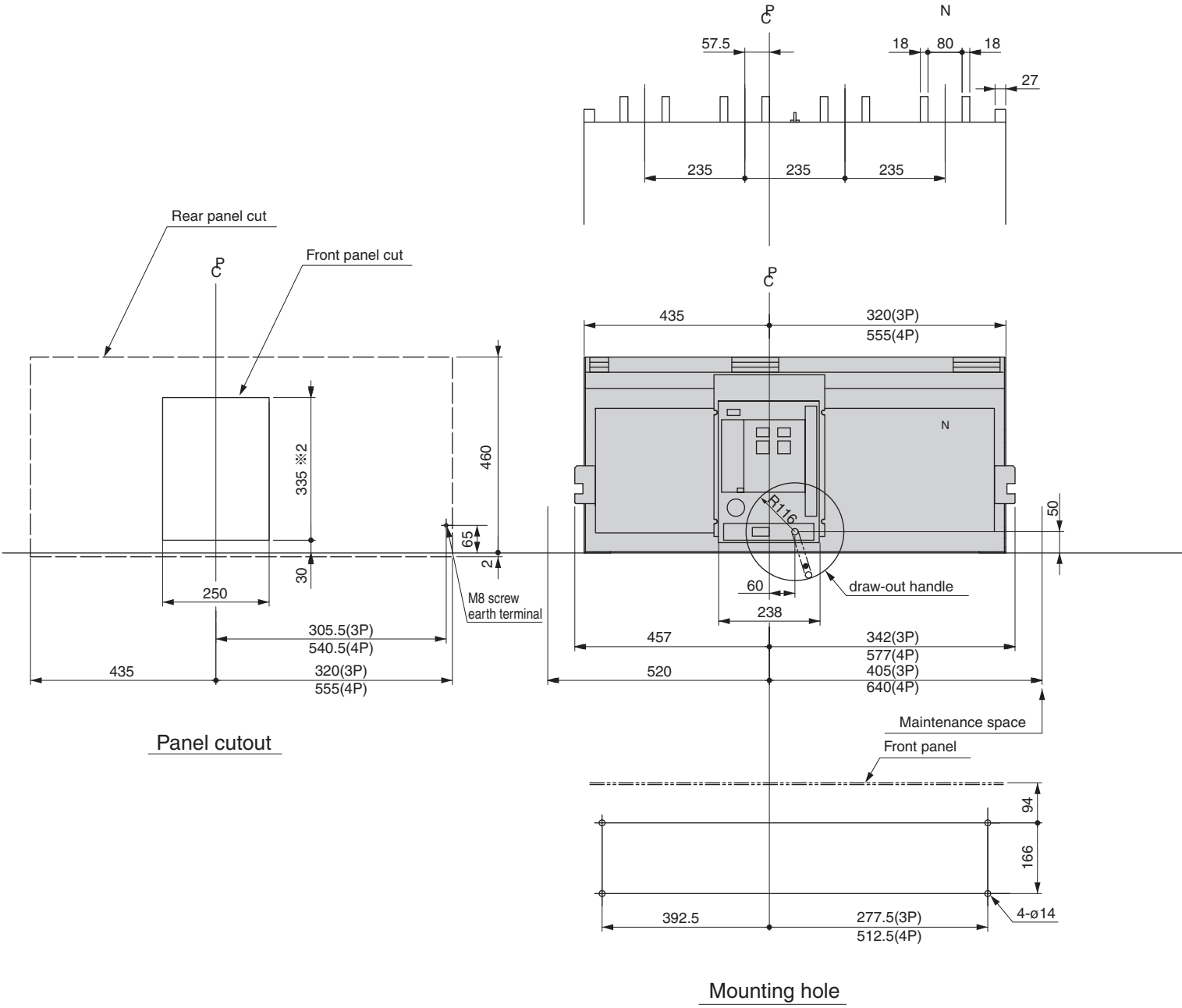

※2: Panel cut should be 339 mm not 335 mm when the door flange is used. Refer to page 41.

• N represents the neutral pole of 4-pole ACBs.

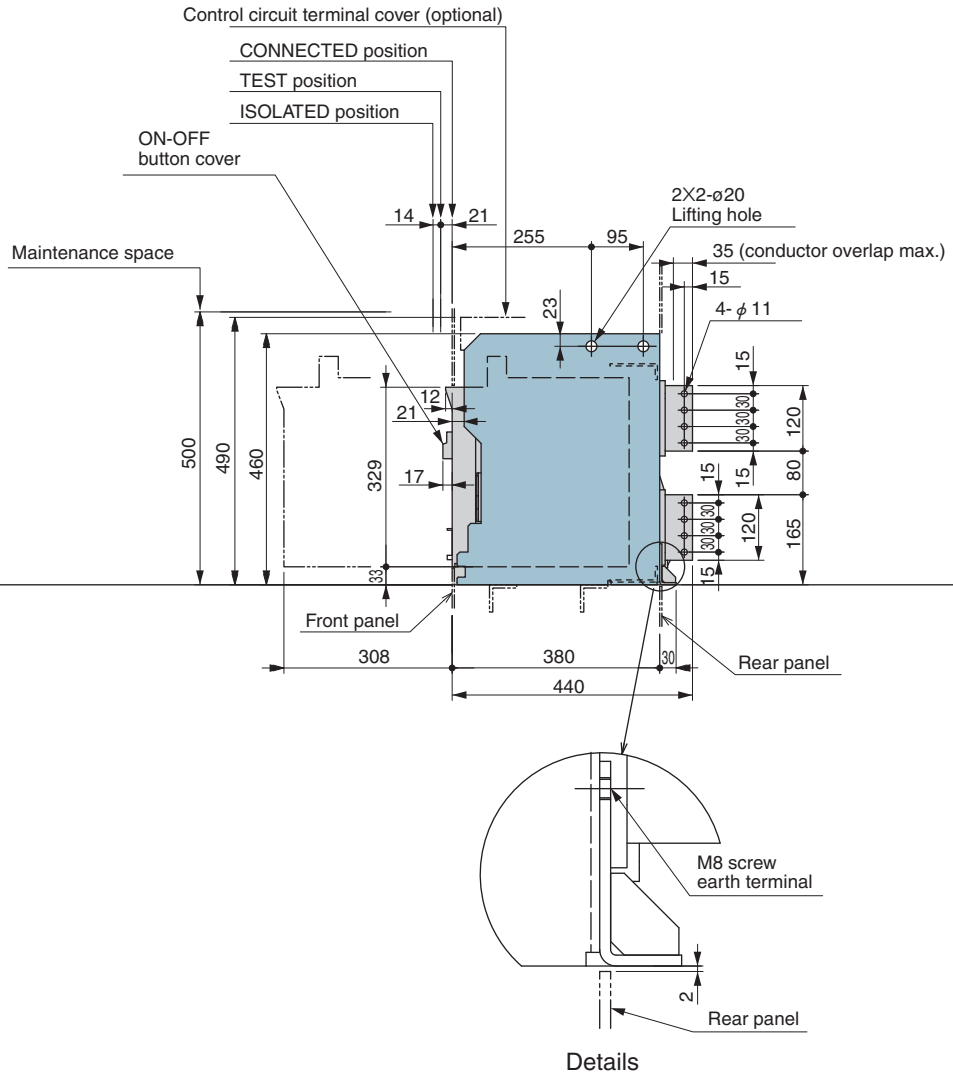
Control circuit terminal cover (optional)
CONNECTED position
TEST position
ISOLATED position
ON-OFF
button cover
Maintenance space
2X2-ø20
Lifting hole
35 (conductor overlap max.)
4- ϕ 11
14
21
255
95
23
15
12
21
17
329
500
490
460
120
80
165
33
Front panel
308
380
30
440
Rear panel
M8 screw
earth terminal
2
Rear panel

Details

6 Connection

1 Conductors connection area

Connect conductors to the main circuit terminals in the conductor connection.
Insulation distance of conductor connection area and earth metal is more than 12.5mm.

• Types AR208S, AR212S, AR216S, AR220S, AR212H, AR220H

■ Vertical terminals 3P

Right side view　　Back view

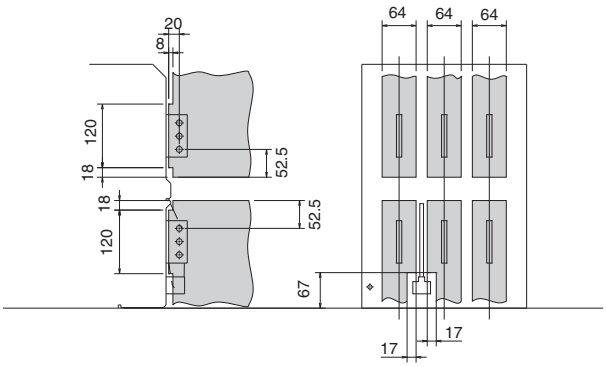

■ Vertical terminals 4P

Right side view　　Back view

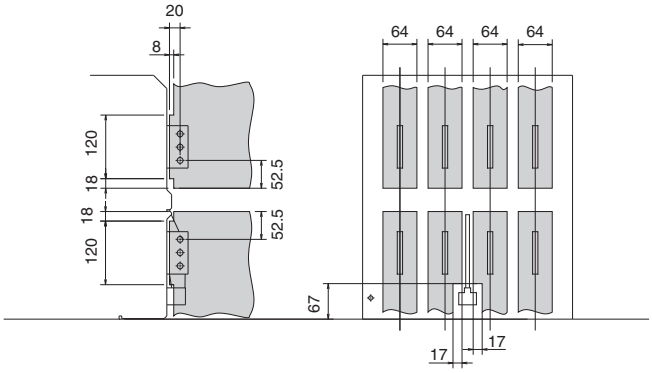

■ Horizontal terminals 3P

Right side view　　Back view

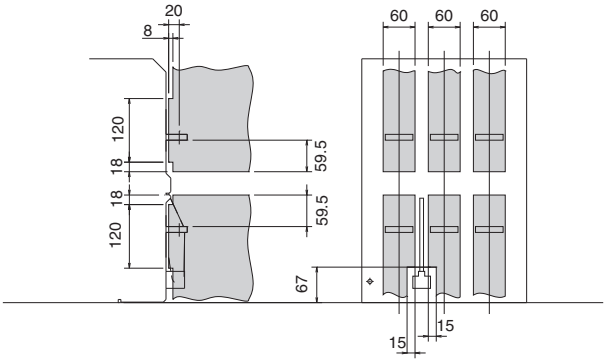

■ Horizontal terminals 4P

Right side view　　Back view

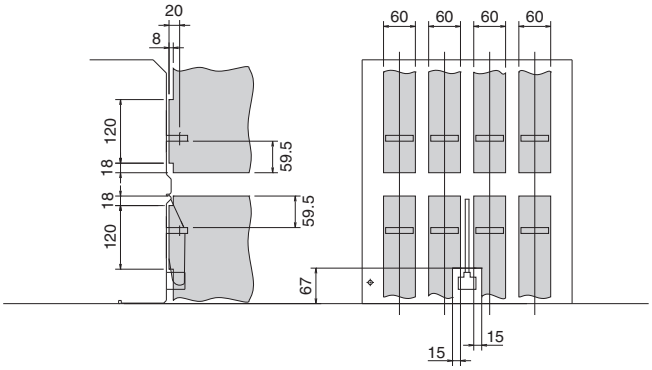

■ Front connections 3P

Right side view　　Back view

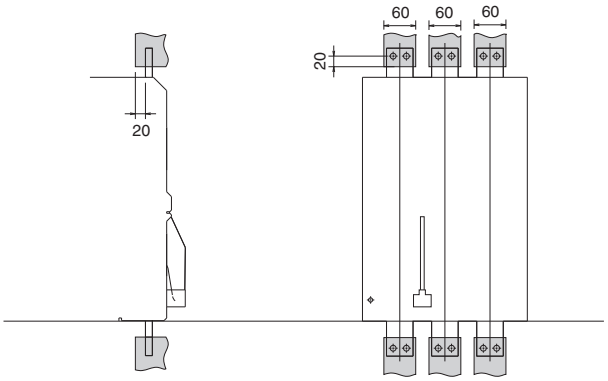

■ Front connections 4P

Right side view　　Back view

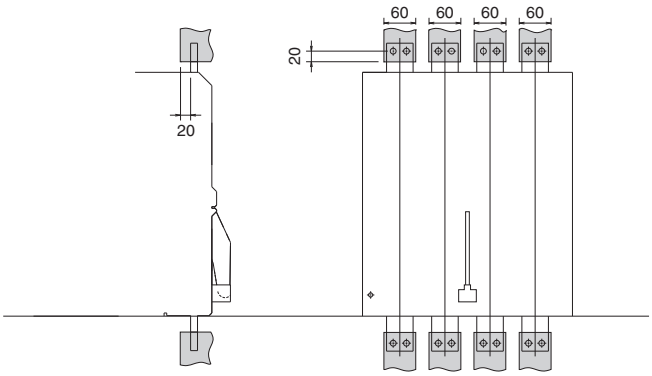

• Types AR325S, AR332S, AR316H, AR320H, AR325H, AR332H

■ Vertical terminals 3P

Right side view

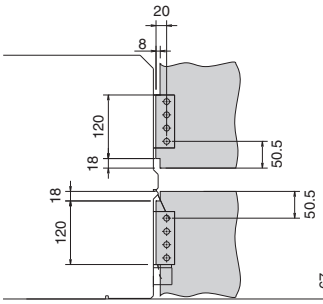

Back view

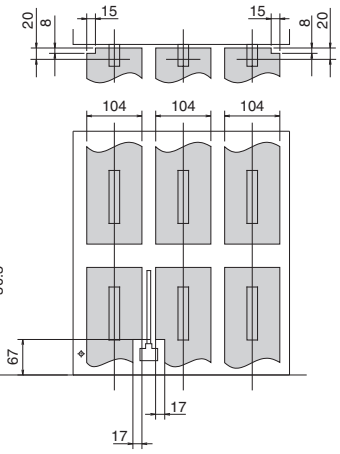

■ Vertical terminals 4P

Right side view

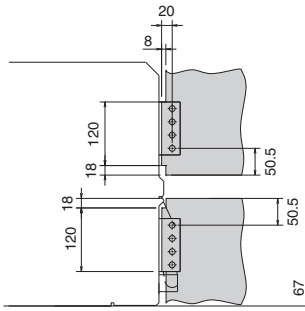

Back view

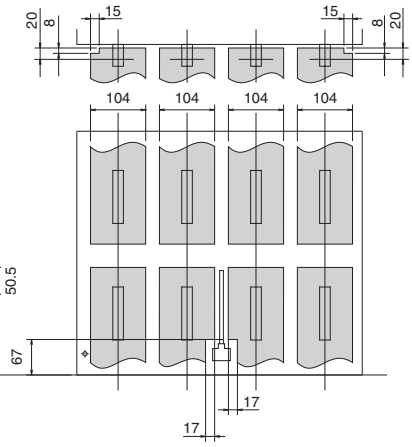

■ Horizontal terminals 3P

Right side view

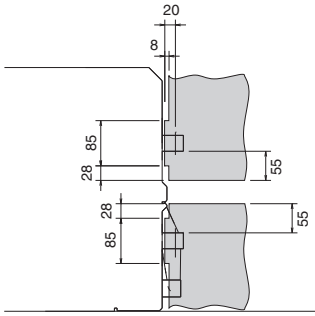

Back view

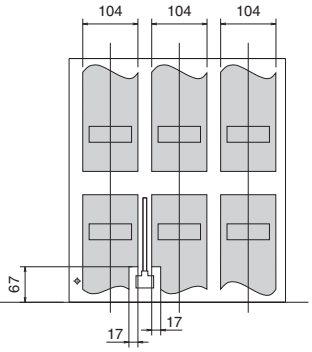

■ Horizontal terminals 4P

Right side view

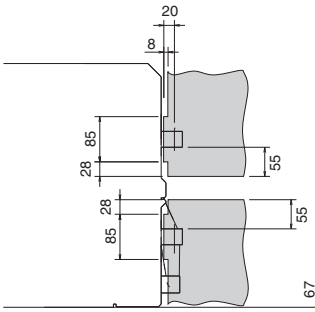

Back view

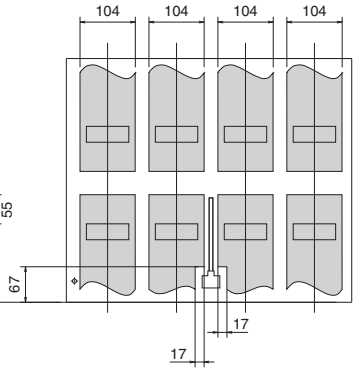

■ Front connections 3P

Right side view

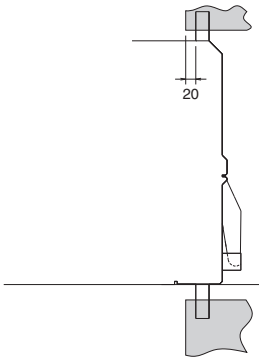

Back view

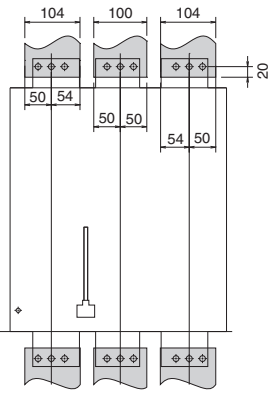

■ Front connections 4P

Right side view

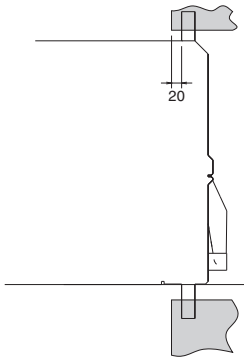

Back view

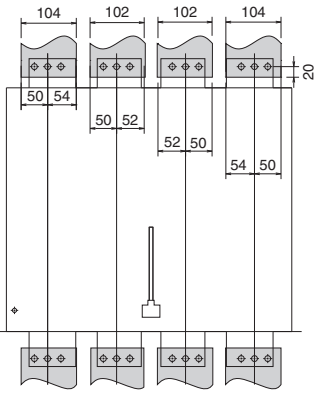

6 Connection

• Types AR440S, AR420H, AR440H

■ Vertical terminals 3P

Right side view

Back view

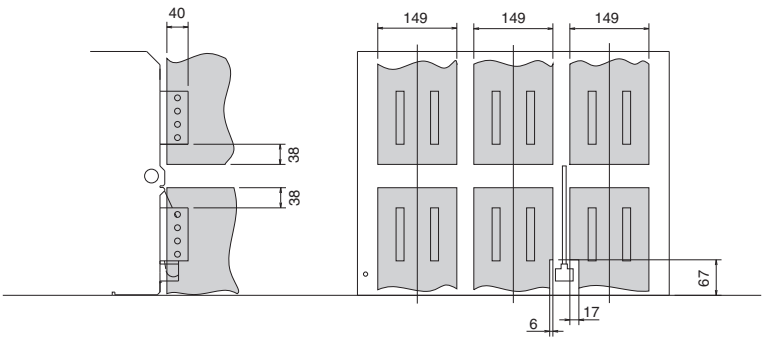

■ Vertical terminals 4P

Right side view

Back view

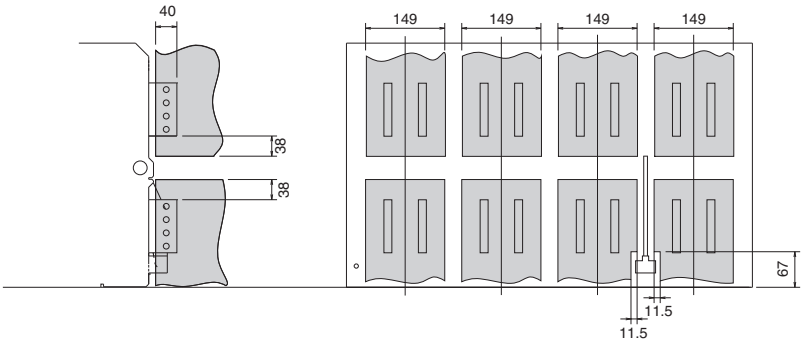

• Type AR440SB

■ Vertical terminals 3P

Right side view　　Back view

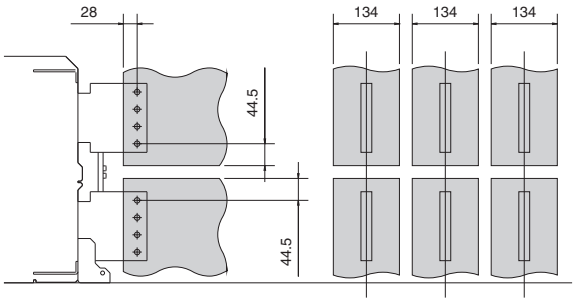

■ Vertical terminals 4P

Right side view　　Back view

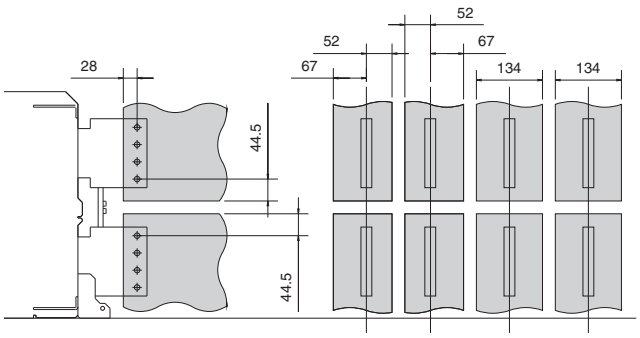

6 Connection

• Types AR650S, AR663S, AR663H

■ Vertical terminals 3P

Right side view

Back view

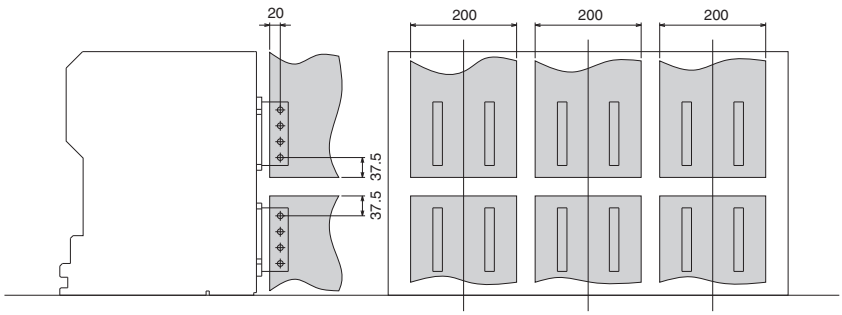

■ Vertical terminals 4P

Right side view

Back view

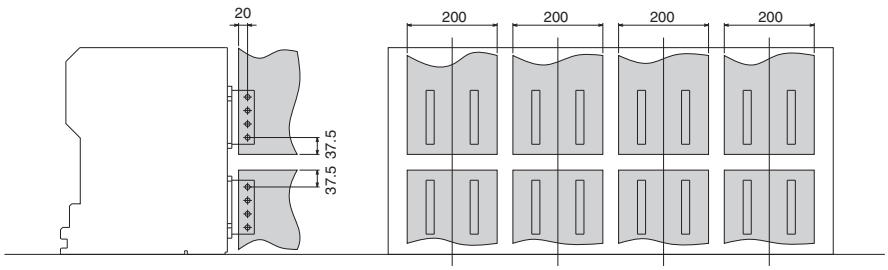

2 Busbars connection

When two busbars are connected to a terminal stud of the ACB, sandwich the terminal stud between the two busbars to utilize both surfaces of the terminal. A spring and plain washer must be used in conjunction with the busbar bolt and nut as below.

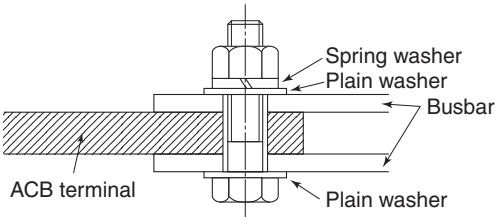

In case of 1 terminal per pole

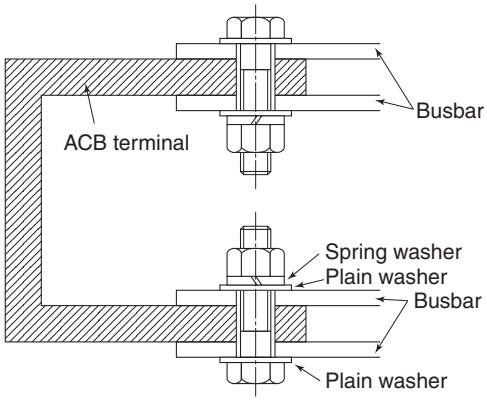

In case of 2 terminals per pole

3 Recommendation for Busbars connection

The busbars to the ACB should be firmly supported near the ACB terminal. Fault currents flow through the busbars developing a large electromagnetic force between the busbars. The support must be strong enough to withstand such forces and ensure the enough insulating distance. The ACB should not be relied on as a single support.

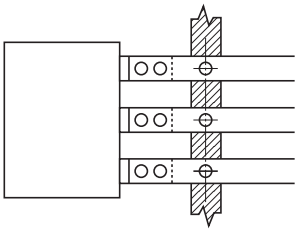

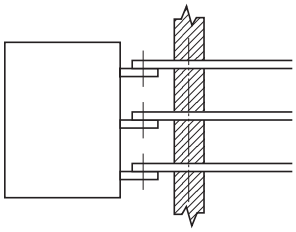

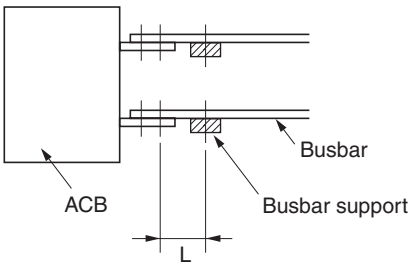

Horizontal terminals

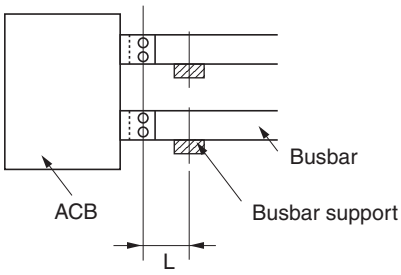

Vertical terminals

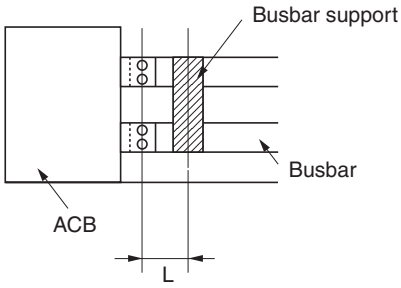

Vertical terminals

The maximum distance of the connection point of ACB to the first busbar support

Short-circuit current (kA)		30	50	65	80	100	120	135
Distance L (mm)	AR2	300	250	150	150	—	—	—
	AR3	350	300	250	150	150	—	—
	AR440SB	350	300	250	150	100	—	—
	AR440S, AR420H, AR440H	350	300	250	150	150	100	—
	AR6	350	300	250	150	150	150	150

7 Circuit Diagram (with AGR-11B OCR)

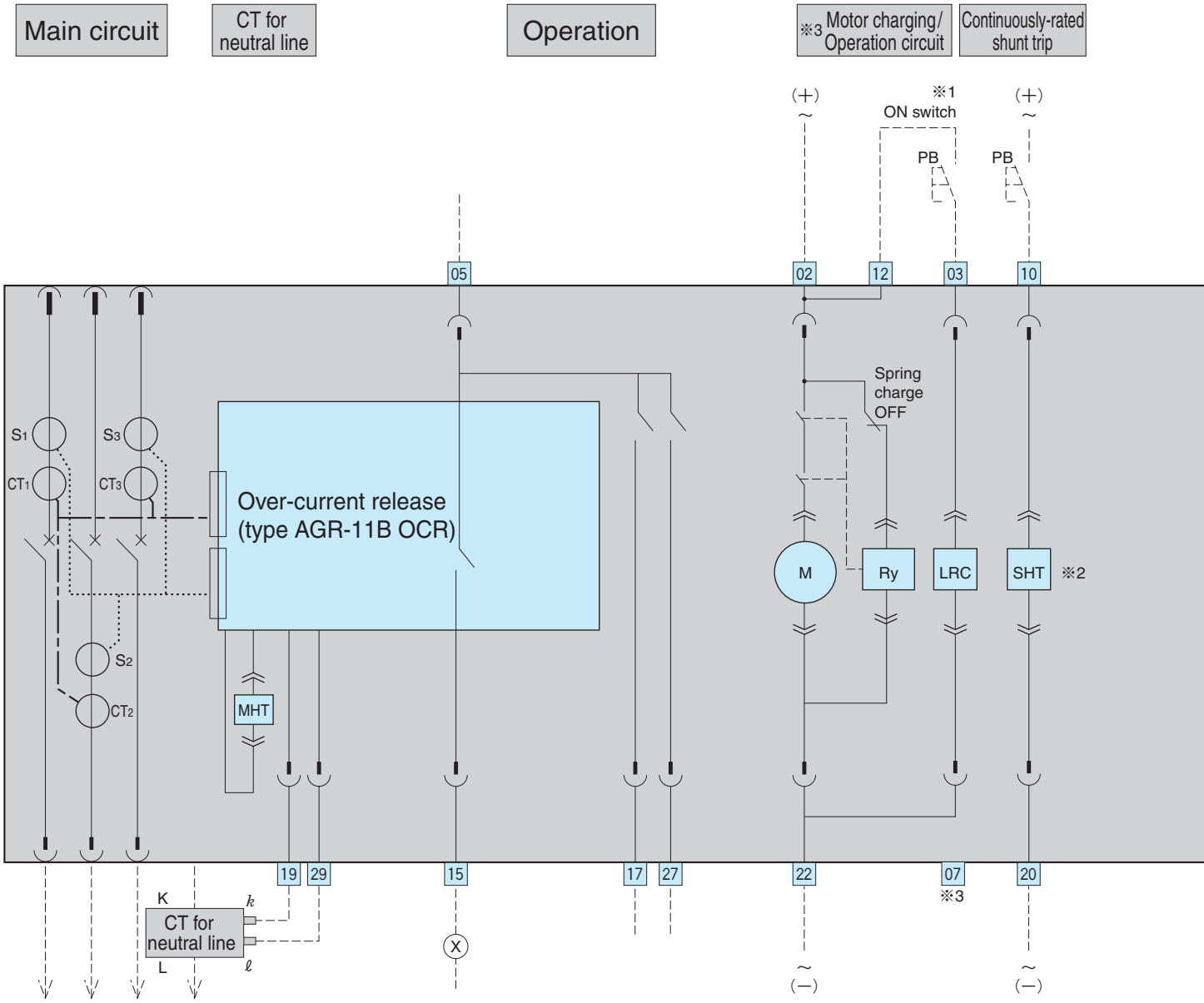

Terminal description

Check OCR voltage before connecting.

02 22 Control power supply AC100 - 240V, DC100 - 250V, DC24V, DC48V

12 Operation switch, common

03 ON switch

05 Operation indication terminal, common

15 OCR trip indication or single-contact trip indication (40ms signal)

17 Trip indication (not ready indication)

27 Spring charge indicator

10 20 Continuously-rated shunt trip

19 Separate CT for neutral line (*k*)

29 Separate CT for neutral line (*ℓ*)

08, 18, 28 UVT power supply

09 UVT power supply common

• **Do not exceed specified voltages**

UVT power supply

Term. No.	AC 100V unit	AC 200V unit	AC 400V unit	AC 450V unit
08 — 09	100V	200V	380V	450V
18 — 09	110V	220V	415V	480V
28 — 09	120V	240V	440V	400V

Term. No.	DC 24V unit	DC 48V unit	DC 100V unit	DC 110V unit
08 — 09	24V	48V	100V	110V

Symbols for accessories

CT1 - CT3 : Power CTs
S1 - S3 : Current sensors
M : Charging motor
LRC : Latch release coil
MHT : Magnetic Hold Trigger
Isolating terminal connector (for draw-out type)
Manual connector
User wiring
Relay or indicator lamp

※1: Do not connect "b"contact of auxiliary switch to ON switch in series, otherwise, pumping may occur.
※2: See page 22 for the circuit diagram of the continuously-rated shunt trip device with capacitor trip device.
※3: For motor split circuit, terminals 02, 22 and 03, 07 are used for charging and closing operation respectively. (Please specify when ordering)
※4: Refer to page 23 (short pulse only)
※5: Only one of terminals 08, 18, 28 must be used as this is a single phase UVT.
※6: Do not use these terminals for other circuits when both instantaneously rated shunt trip and UVT are fitted. These terminals are used by Terasaki as the anti-burnout SW for the instantaneously rated shunt trip.
Note: In case of a UVT and a Shunt fitted together or Double opening or closing coil, use an aux. switch to prevent burnout. Contact TERASAKI for wiring.

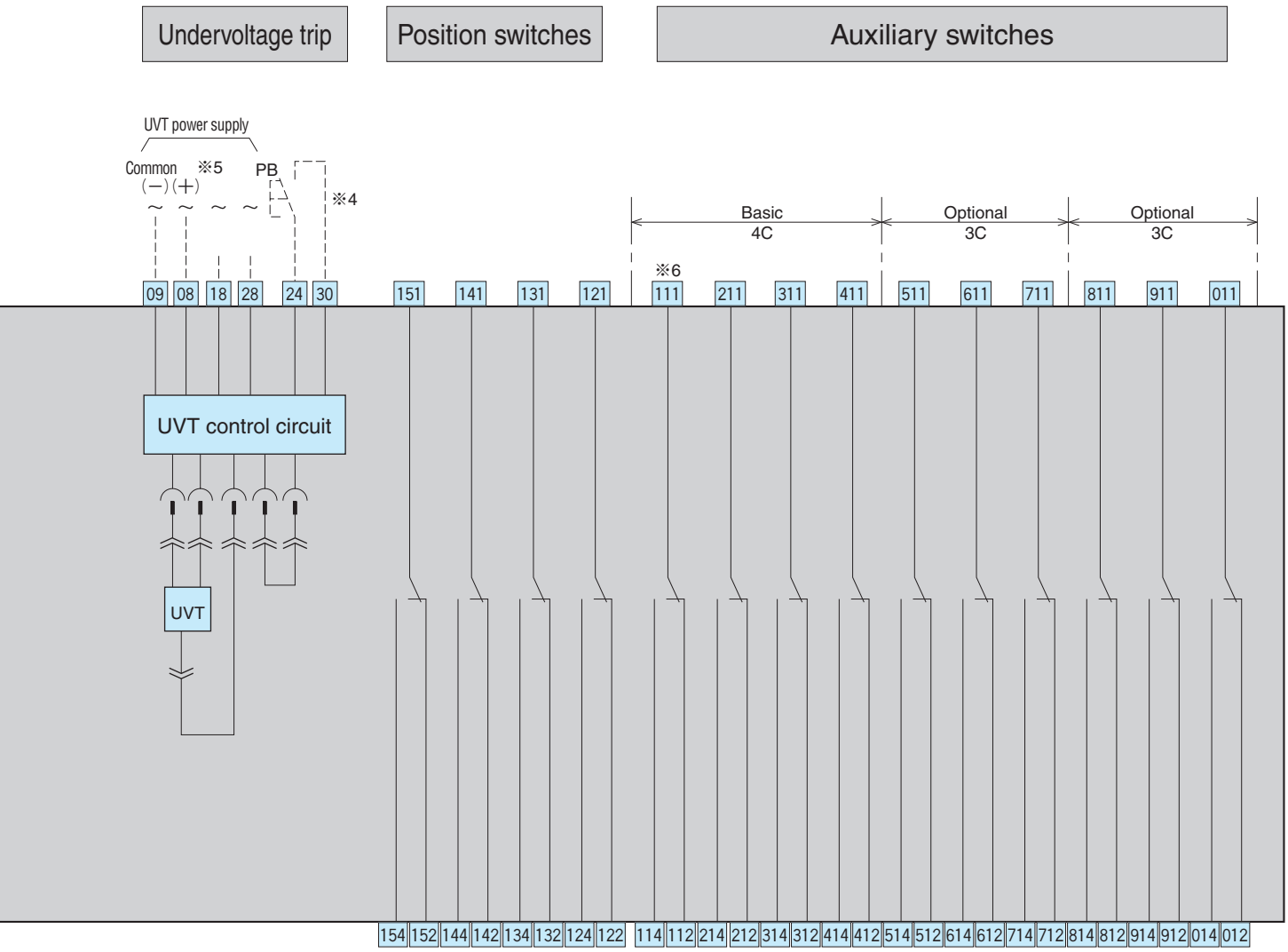

Designation of terminals for auxiliary and position switches

* * *

- 1: Common
- 2: b-contact
- 4: a-contact

- 1: Auxiliary switch
- 2: Position switch (for CONNECTED)
- 3: Position switch (for TEST)
- 4: Position switch (for ISOLATED)
- 5: Position switch (for INSERT)

- 1 – 0: Switch numbers
- A, B, C: Auxiliary switches for microload

CONNECTED position	: 121–124 ON 121–122 OFF
TEST position	: 131–134 ON 131–132 OFF
ISOLATED position	: 141–144 ON 141–142 OFF
INSERT position	: 151–154 ON 151–152 OFF

For operation sequence of position switches, see page 19.

Position switches

Top	151	141	131	121
Middle	154	144	134	124
Bottom	152	142	132	122

Top	131	121
Middle	134	124
Bottom	132	122

Operation/control circuits

01	02	03	04	05	06	07	08	09	10
11	12	13	14	15	16	17	18	19	20
21	22	23	24	25	26	27	28	29	30

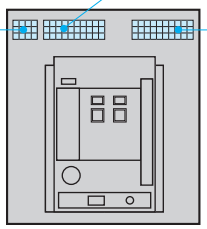

Auxiliary switches

(4c + optional 6c arrangement)

111	211	311	411	511	611	711	811	911	011
114	214	314	414	514	614	714	814	914	014
112	212	312	412	512	612	712	812	912	012

(4c arrangement)

111	211	311	411
114	214	314	414
112	212	312	412

7 Circuit Diagram (with AGR-21B OCR)

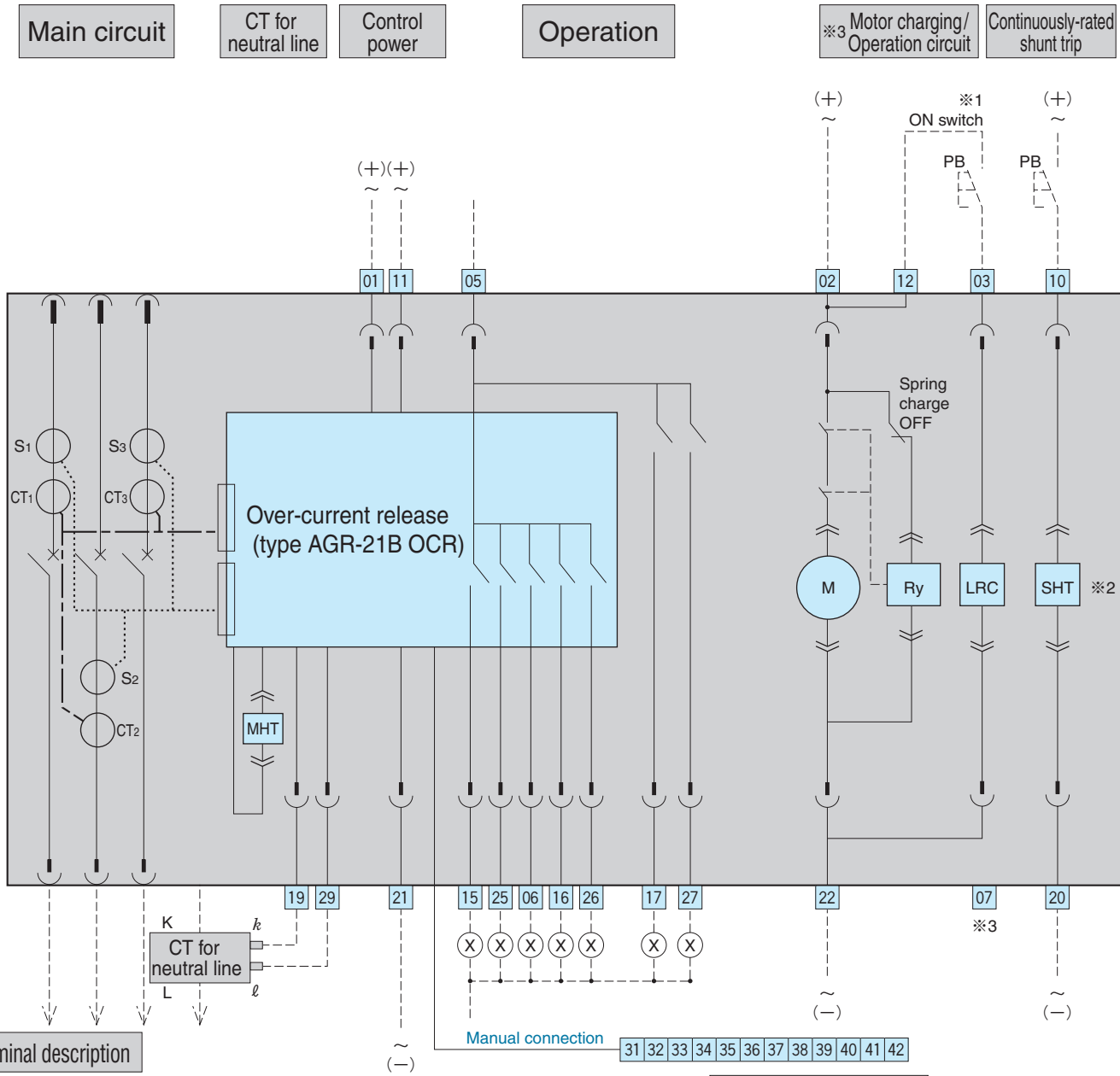

Terminal description

Check OCR voltage before connecting.

- 01 21 Control power supply AC200 - 240V, DC200 - 250V, DC48V
- 01 11 Control power supply AC100 - 120V
- 11 21 Control power supply DC100 - 125V, DC24V
- 02 22 Control power supply AC100 - 240V, DC100 - 250V, DC24V, DC48V
- 12 Operation switch, common
- 03 ON switch
- 05 Operation indication terminal, common
- 15 LT trip indication
- 25 ST, INST trip indication
- 06 PTA indication
- 16 GF trip indication
- 26 System alarm indication
- 17 REF, NS or trip indication
- 27 Spring charge indication
- 10 20 Continuously-rated shunt trip
- 19 Separate CT for neutral line (k)
- 29 Separate CT for neutral line (ℓ)
- 08, 18, 28 UVT power supply
- 09 UVT power supply common
- 35 Separate CT for REF (k)
- 36 Separate CT for REF (ℓ)
- 41 Communication line (–)
- 42 Communication line (+)
- 32 Communication line (common)

• Do not exceed specified voltages

UVT power supply

Term. No.	AC 100V unit	AC 200V unit	AC 400V unit	AC 450V unit
08 — 09	100V	200V	380V	450V
18 — 09	110V	220V	415V	480V
28 — 09	120V	240V	440V	400V

Term. No.	DC 24V unit	DC 48V unit	DC 100V unit	DC 110V unit
08 — 09	24V	48V	100V	110V

Symbols for accessories

CT1 - CT3 : Power CTs
S1 - S3 : Current sensors
M : Charging motor
LRC : Latch release coil
MHT : Magnetic Hold Trigger

Isolating terminal connector (for draw-out type)
Manual connector
User wiring
Relay or indicator lamp

※1: Do not connect "b"contact of auxiliary switch to ON switch in series, otherwise, pumping may occur.
※2: See page 22 for the circuit diagram of the continuously-rated shunt trip device with capacitor trip device.
※3: For motor split circuit, terminals 02, 22 and 03, 07 are used for charging and closing operation respectively. (Please specify when ordering)
※4: Refer to page 23 (short pulse only)
※5: Only one of terminals 08, 18, 28 must be used as this is a single phase UVT.
※6: Do not use these terminals for other circuits when both instantaneously rated shunt trip and UVT are fitted. These terminals are used by Terasaki as the anti-burnout SW for the instantaneously rated shunt trip.

Note: In case of a UVT and a Shunt fitted together or Double opening or closing coil, use an aux. switch to prevent burnout. Contact TERASAKI for wiring.

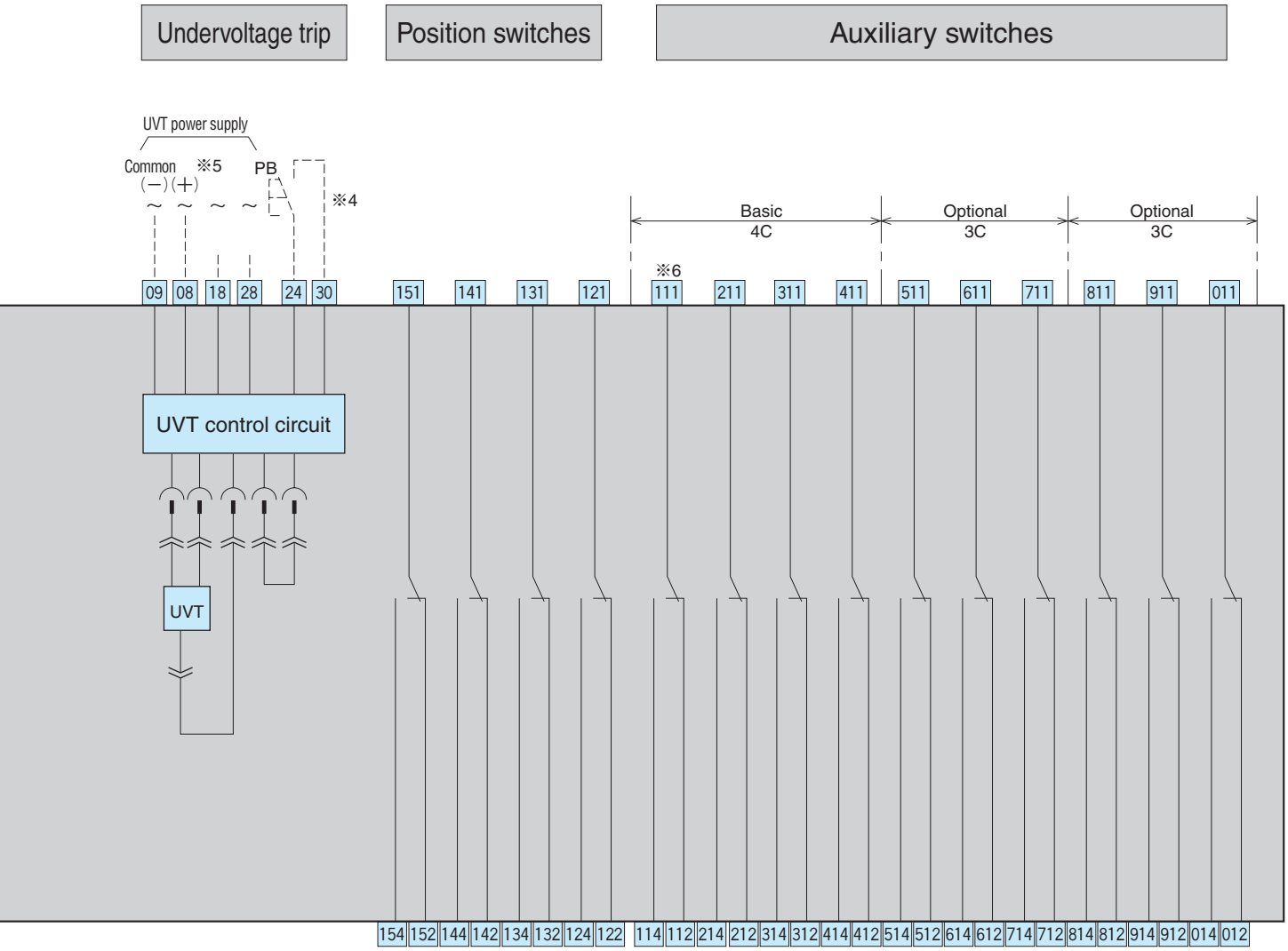

Designation of terminals for auxiliary and position switches

* * *

- 1: Common
- 2: b-contact
- 4: a-contact

- 1: Auxiliary switch
- 2: Position switch (for CONNECTED)
- 3: Position switch (for TEST)
- 4: Position switch (for ISOLATED)
- 5: Position switch (for INSERT)

- 1 – 0: Switch numbers
- A, B, C: Auxiliary switches for microload

CONNECTED position	: 121–124 ON 121–122 OFF
TEST position	: 131–134 ON 131–132 OFF
ISOLATED position	: 141–144 ON 141–142 OFF
INSERT position	: 151–154 ON 151–152 OFF

For operation sequence of position switches, see page 19.

Position switches

Top	151	141	131	121
Middle	154	144	134	124
Bottom	152	142	132	122

Top	131	121
Middle	134	124
Bottom	132	122

Operation/control circuits

01	02	03	04	05	06	07	08	09	10
11	12	13	14	15	16	17	18	19	20
21	22	23	24	25	26	27	28	29	30

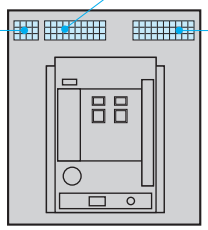

Auxiliary switches

(4c + optional 6c arrangement)

111	211	311	411	511	611	711	811	911	011
114	214	314	414	514	614	714	814	914	014
112	212	312	412	512	612	712	812	912	012

(4c arrangement)

111	211	311	411
114	214	314	414
112	212	312	412

31	32	33	34	35	36	37	38	39	40	41	42

Manual connection

If the ground fault protection on the line side or communication function is incorporated, control circuit terminals are of manual connection type.

7 Circuit Diagram (with AGR-22B, 31B OCR)

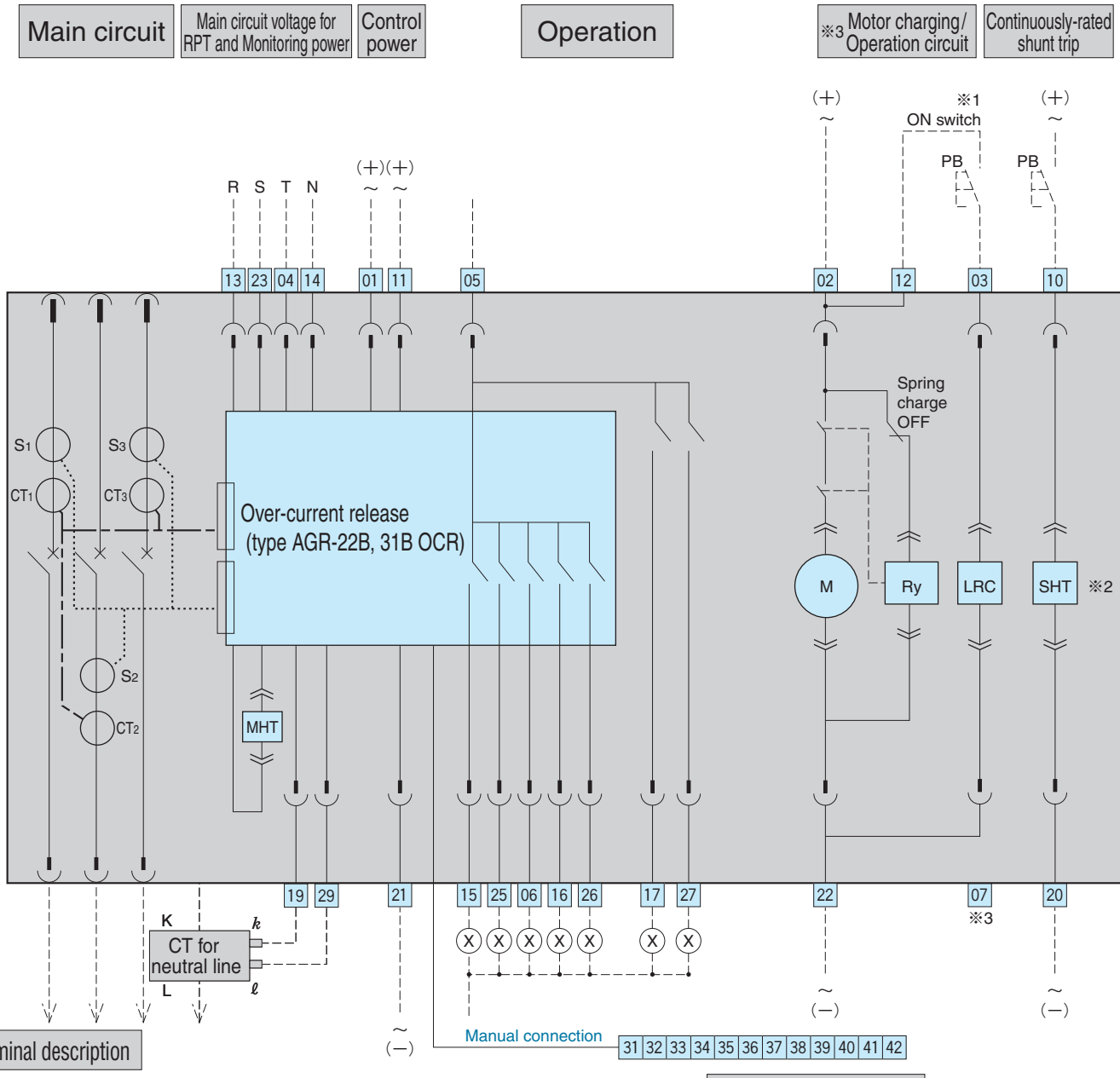

Terminal description

Check OCR voltage before connecting.

01 21 Control power supply AC200 - 240V, DC200 - 250V, DC48V

01 11 Control power supply AC100 - 120V

11 21 Control power supply DC100 - 125V, DC24V

02 22 Control power supply AC100 - 240V, DC100 - 250V, DC24V, DC48V

12 Operation switch, common

03 ON switch

05 Operation indication terminal, common

15 LT trip indication

25 ST, INST trip indication

06 PTA indication

16 GF trip indication or RPT trip indication or ELT trip indication

26 System alarm indication

17 REF, OH, NS or trip indication

27 PTA2, UV or spring charge indication

10 20 Continuously-rated shunt trip

19 Separate CT for neutral line (k)

29 Separate CT for neutral line (ℓ)

08, 18, 28 UVT power supply

09 UVT power supply common

35 Separate CT for REF (k)

36 Separate CT for REF (ℓ)

41 Communication line (–)

42 Communication line (+)

32 Communication line (common)

• Do not exceed specified voltages

UVT power supply

Term. No.	AC 100V unit	AC 200V unit	AC 400V unit	AC 450V unit
08 — 09	100V	200V	380V	450V
18 — 09	110V	220V	415V	480V
28 — 09	120V	240V	440V	400V

Term. No.	DC 24V unit	DC 48V unit	DC 100V unit	DC 110V unit
08 — 09	24V	48V	100V	110V

Symbols for accessories

CT1 - CT3 : Power CTs
S1 - S3 : Current sensors
M : Charging motor
LRC : Latch release coil
MHT : Magnetic Hold Trigger

Isolating terminal connector (for draw-out type)
Manual connector
User wiring
Relay or indicator lamp

※1: Do not connect "b"contact of auxiliary switch to ON switch in series, otherwise, pumping may occur.
※2: See page 22 for the circuit diagram of the continuously-rated shunt trip device with capacitor trip device.
※3: For motor split circuit, terminals 02, 22 and 03, 07 are used for charging and closing operation respectively. (Please specify when ordering)
※4: Refer to page 23 (short pulse only)
※5: Only one of terminals 08, 18, 28 must be used as this is a single phase UVT.
※6: Do not use these terminals for other circuits when both instantaneously rated shunt trip and UVT are fitted. These terminals are used by Terasaki as the anti-burnout SW for the instantaneously rated shunt trip.
Note: In case of a UVT and a Shunt fitted together or Double opening or closing coil, use an aux. switch to prevent burnout. Contact TERASAKI for wiring.

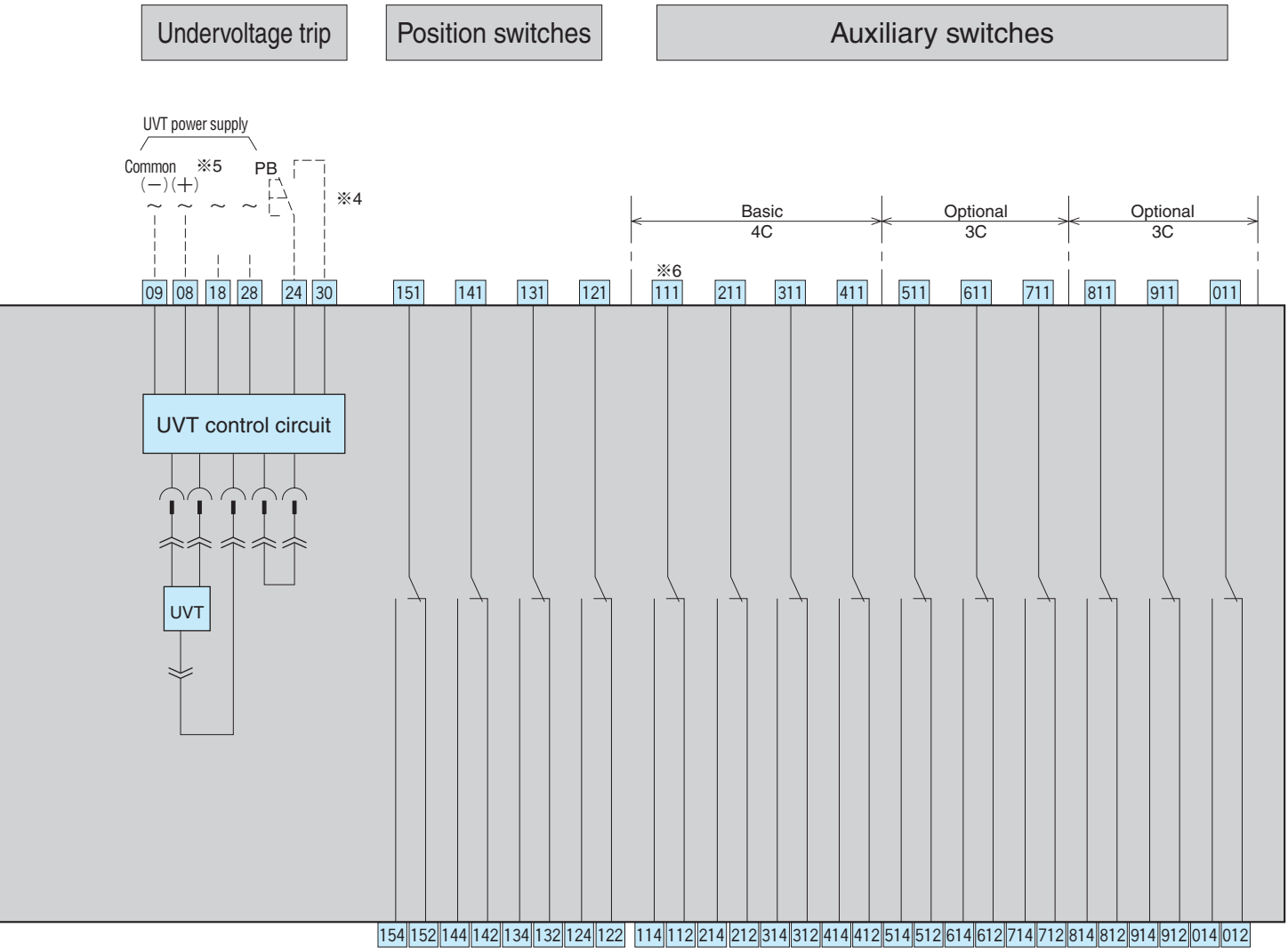

Designation of terminals for auxiliary and position switches

* * *

- 1: Common
- 2: b-contact
- 4: a-contact

- 1: Auxiliary switch
- 2: Position switch (for CONNECTED)
- 3: Position switch (for TEST)
- 4: Position switch (for ISOLATED)
- 5: Position switch (for INSERT)

- 1 – 0: Switch numbers
- A, B, C: Auxiliary switches for microload

CONNECTED position	: 121–124 ON 121–122 OFF
TEST position	: 131–134 ON 131–132 OFF
ISOLATED position	: 141–144 ON 141–142 OFF
INSERT position	: 151–154 ON 151–152 OFF

For operation sequence of position switches, see page 19.

Position switches

Top	151	141	131	121
Middle	154	144	134	124
Bottom	152	142	132	122

Top	131	121
Middle	134	124
Bottom	132	122

Operation/control circuits

01	02	03	04	05	06	07	08	09	10
11	12	13	14	15	16	17	18	19	20
21	22	23	24	25	26	27	28	29	30

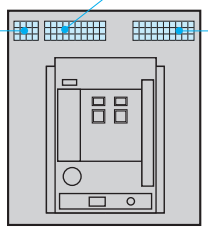

Auxiliary switches

(4c + optional 6c arrangement)

111	211	311	411	511	611	711	811	911	011
114	214	314	414	514	614	714	814	914	014
112	212	312	412	512	612	712	812	912	012

(4c arrangement)

111	211	311	411
114	214	314	414
112	212	312	412

31	32	33	34	35	36	37	38	39	40	41	42

Manual connection

If the ground fault protection is incorporated and a separate current transformer for neutral line is used, or any one of ground fault protection on the line side, zone interlock or communication function is incorporated, control circuit terminals are of manual connection type.

8 Technical Data

Dielectric strength

Circuit			Withstand voltage (at 50/60 Hz)		Rated Impulse withstand voltage U_{imp}
Main circuit			Between terminals, terminal group to earth	AC3500V for 1 minute	12kV
Control circuits	Auxiliary switches	For general service	Terminal group to earth	AC2500V for 1 minute	6kV
		For microload	Terminal group to earth	AC2000V for 1 minute	4kV
	Position switches		Terminal group to earth	AC2000V for 1 minute	4kV
	Over-current release (OCR)		Terminal group to earth	AC2000V for 1 minute	4kV
	Power supply for undervoltage/ reverse power trip function		Terminal group to earth	AC2500V for 1 minute	6kV
Other accessories			Terminal group to earth	AC2000V for 1 minute	4kV

Note: The values shown above are those measured on phase connections and cannot be applied to control terminals on the ACB.

Internal resistance and power consumption

• Standard Series

Type	AR208S	AR212S	AR216S	AR220S	AR325S	AR332S	AR440SB	AR440S	AR650S	AR663S
Rated current (A)	800	1250	1600	2000	2500	3200	4000	4000	5000	6300
DC internal resistance per pole (mΩ)	0.033	0.033	0.028	0.024	0.014	0.014	0.017	0.014	0.012	0.010
Power consumption for 3 poles (W)	64	155	215	288	263	430	816	672	900	1190

• High fault Series

Type	AR212H	AR216H	AR220H	AR316H	AR320H	AR325H	AR332H	AR420H	AR440H	AR663H
Rated current (A)	1250	1600	2000	1600	2000	2500	3200	2000	4000	6300
DC internal resistance per pole (mΩ)	0.024	0.024	0.024	0.014	0.014	0.014	0.014	0.014	0.014	0.010
Power consumption for 3 poles (W)	113	184	288	108	168	263	430	168	672	1190

Note: Above figures are based on the calculation of $3I^2R$. For more information please contact TERASAKI.

The max. rated current [I_n] depends on the main circuit terminal arrangement

Ambient temperature 40 °C

Based Standard	JIS C 8201-2-1 Ann.1 IEC60947-2, EN60947-2 AS3947.2			ANSI C37.13 NEMA, SG-3		
Type	Terminal arrangement			Terminal arrangement		
	Horizontal terminals	Vertical terminals	Front connections	Horizontal terminals	Vertical terminals	Front connections
AR208S	800	800	800	800	800	800
AR212S	1250	1250	1250	1250	1250	1250
AR216S	1600	1600	1600	1540	1600	1570
AR220S	2000	2000	2000	1670	2000	1830
AR325S	2430	2500	2500	2230	2500	2430
AR332S	2790	3200	3150	2700	3200	2890
AR440SB	—	4000	—	—	3310	—
AR440S	—	4000	—	—	3700	—
AR650S	—	5000	—	—	4700	—
AR663S	—	6300	—	—	5680	—
AR212H	1250	1250	—	1250	1250	—
AR216H	1600	1600	—	1540	1600	—
AR220H	2000	2000	—	1670	2000	—
AR316H	1600	1600	—	1600	1600	—
AR320H	2000	2000	—	2000	2000	—
AR325H	2430	2500	—	2230	2500	—
AR332H	2790	3200	—	2700	3200	—
AR420H	—	2000	—	—	※	—
AR440H	—	4000	—	—	3700	—
AR663H	—	6300	—	—	5680	—

Note 1: If different type of terminal arrangement are used for line and load sides refer to the ratings for the horizontal terminals.
Note 2: Front connection can not be specified with the different types of terminal arrangement for line and load sides.
※: Contact TERASAKI for the details.

Derating

• Standard Series

Based Standards	Ambient temperature (°C)	Type / Connecting bar sizes	AR208S 2X50X5t	AR212S 2X80X5t	AR216S 2X100X5t	AR220S 3X100X5t	AR325S 2X100X10t	AR332S 3X100X10t	AR440SB 4X150X10t	AR440S 4X150X6t	AR650S 3X200X10t	AR663S 4X200X10t
JIS C 8201-2-1 Ann.1 IEC60947-2 EN 60947-2 AS3947.2	40 (Standard ambient temperature)		800	1250	1600	2000	2500	3200	4000	4000	5000	6300
	45		800	1250	1600	2000	2500	3200	4000	4000	5000	6300
	50		800	1250	1600	2000	2500	3200	3940	4000	4950	6000
	55		800	1200	1540	1820	2500	2990	3820	3940	4710	5680
	60		800	1150	1460	1740	2400	2850	3690	3760	4450	5370
NEMA, SG-3 ANSI C37.13	40 (Standard ambient temperature)		800	1250	1540	2000	2500	3200	3310	3700	4700	5680
	45		800	1190	1470	1960	2500	3010	3200	3580	4450	5370
	50		800	1130	1390	1860	2440	2860	3100	3470	4180	5050
	55		790	1070	1310	1750	2300	2690	2980	3350	3900	4710
	60		740	1000	1230	1640	2150	2520	2870	3140	3610	4350

Note: The values are applicable for both Draw-out type and Fixed type.
The values of AR208S, AR212S and AR216S are for horizontal terminals on both line and load side.
The values of AR220S, AR325S, AR332S, AR440SB, AR440S, AR650S and AR663S are for vertical terminals on both line and load side.
Above figures are subject to the design of the enclosure and rating of busbar.

• High fault Series

Based Standards	Ambient temperature (°C)	Type / Connecting bar sizes	AR212H 2X80X5t	AR216H 2X100X5t	AR220H 3X100X5t	AR316H 2X100X5t	AR320H 3X100X5t	AR325H 2X100X10t	AR332H 3X100X10t	AR420H 3X100X5t	AR440H 4X150X6t	AR663H 4X200X10t
JIS C 8201-2-1 Ann.1 IEC60947-2 EN 60947-2 AS3947.2	40 (Standard ambient temperature)		1250	1600	2000	1600	2000	2500	3200	2000	4000	6300
	45		1250	1600	2000	1600	2000	2500	3200	2000	4000	6300
	50		1250	1600	2000	1600	2000	2500	3200	2000	4000	6000
	55		1250	1600	1820	1600	2000	2500	2990	2000	3940	5680
	60		1250	1550	1740	1600	2000	2400	2850	2000	3760	5370
NEMA, SG-3 ANSI C37.13	40 (Standard ambient temperature)		1250	1600	2000	1600	2000	2500	3200	2000	3700	5680
	45		1250	1600	1960	1600	2000	2500	3010	2000	3580	5370
	50		1250	1600	1860	1600	2000	2440	2860	2000	3470	5050
	55		1250	1510	1750	1600	1950	2300	2690	2000	3350	4710
	60		1240	1420	1640	1550	1830	2150	2520	2000	3140	4350

Note: The values are applicable for both Draw-out type and Fixed type.
The values are for vertical terminals on both line and load side.
Above figures are subject to the design of the enclosure and rating of busbar.

8 Technical Data

What Is Discrimination?

Discrimination, also called selectivity, is the co-ordination of protective devices such that a fault is cleared by the protective device installed immediately upstream of the fault, and by that device alone.

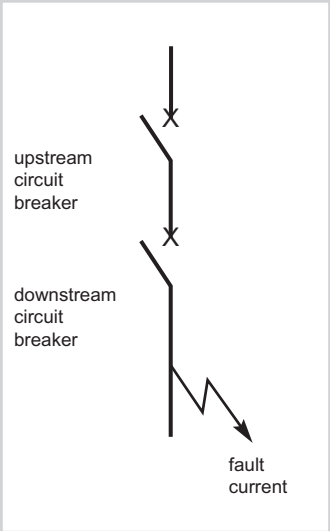

Total discrimination

Discrimination is said to be total if the downstream circuit breaker opens and the upstream circuit breaker remains closed. This ensures maximum availability of the system.

Partial discrimination

Discrimination is partial if the above condition is not fulfiled up to the prospective short-circuit current, but to a lesser value, termed the selectivity limit current (I_s).

Above this value both circuit breakers could open, resulting in loss of selectivity

How To Read The Discrimination Tables

Boxes containing the letter "T" indicate total discrimination between the relevant upstream and downstream circuit-breakers. Total discrimination applies for all fault levels up to the breaking capacity of the upstream or the downstream circuit breaker, whichever is the lesser.

For the other boxes, discrimination is either partial or there is no discrimination.

Worked Examples

Q (1) A main switchboard requires a 1600A ACB feeding a 400A MCCB.The fault level is 65kA. What combination of protective devices would provide total discrimination?

A (1) A ***TemPower2 ACB*** AR216S feeding a ***TemBreak2*** S400GJ would provide total discrimination up to 65kA. See page 73

Note: Discrimination would be total whether the ***TemPower2 ACB*** had an integral or external protection relay because I_{cw} (1s) = I_{cs} Most other ACBs have I_{cw}(1s) < I_{cs}.

Discrimination Table

Upsream: ***TemPower2 ACB*** with or without Integral Protection Relay

Downstream: ***TemBreak2 MCCB***

Upstream ACB

Downstream MCCB Frame	Model	Breaking Capacity	800A AR208S 65kA	1250A AR212S 65kA	1250A AR212H 80kA	1600A AR216S 65kA	1600A AR216H 80kA	1600A AR316H 100kA	2000A AR220S 65kA	2000A AR220H 80kA	2000A AR320H 100A	2500A AR325S 85kA	2500A AR325H 100kA	3200A AR332S 85kA	3200A AR332H 100kA	4000A AR440SB 100kA	5000A AR650S 120kA	6300A AR663S 120kA	6300A AR663H 135kA
125A	E125NJ	25kA	T	T	T	T	T	T	T	T	T	T	T	T	T	T	T	T	T
	S125NJ	36kA	T	T	T	T	T	T	T	T	T	T	T	T	T	T	T	T	T
	S125GJ	65kA	T	T	T	T	T	T	T	T	T	T	T	T	T	T	T	T	T
	H125NJ	125kA	T	T	T	T	T	T	T	T	T	T	T	T	T	T	T	T	T
	L125NJ	200kA	T	T	T	T	T	T	T	T	T	T	T	T	T	T	T	T	T
160A/ 250A	S160NJ	36kA	T	T	T	T	T	T	T	T	T	T	T	T	T	T	T	T	T
	S160GJ	65kA	T	T	T	T	T	T	T	T	T	T	T	T	T	T	T	T	T
	E250NJ	25kA	T	T	T	T	T	T	T	T	T	T	T	T	T	T	T	T	T
	S250NJ	36kA	T	T	T	T	T	T	T	T	T	T	T	T	T	T	T	T	T
	S250GJ	65kA	T	T	T	T	T	T	T	T	T	T	T	T	T	T	T	T	T
	S250PE	70kA	T	T	T	T	T	T	T	T	T	T	T	T	T	T	T	T	T
	H250NJ	125kA	T	T	T	T	T	T	T	T	T	T	T	T	T	T	T	T	T
	L250NJ	200KA	T	T	T	T	T	T	T	T	T	T	T	T	T	T	T	T	T
400A/ 630A	E400NJ	25kA	T	T	T	T	T	T	T	T	T	T	T	T	T	T	T	T	T
	S400CJ	36kA	T	T	T	T	T	T	T	T	T	T	T	T	T	T	T	T	T
	S400NJ	50kA	T	T	T	T	T	T	T	T	T	T	T	T	T	T	T	T	T
	S400NE	50kA	T	T	T	T	T	T	T	T	T	T	T	T	T	T	T	T	T
	S400GJ	70kA	T	T	T	T	T	T	T	T	T	T	T	T	T	T	T	T	T
	S400GE	70kA	T	T	T	T	T	T	T	T	T	T	T	T	T	T	T	T	T
	S400PJ	85kA	T	T	T	T	T	T	T	T	T	T	T	T	T	T	T	T	T
	S400PE	85kA	T	T	T	T	T	T	T	T	T	T	T	T	T	T	T	T	T
	H400NJ	125kA	T	T	T	T	T	T	T	T	T	T	T	T	T	T	T	T	T
	H400NE	125kA	T	T	T	T	T	T	T	T	T	T	T	T	T	T	T	T	T
	E630NE	36kA	T	T	T	T	T	T	T	T	T	T	T	T	T	T	T	T	T
	S630CE	50kA	T	T	T	T	T	T	T	T	T	T	T	T	T	T	T	T	T
	S630GE	70kA	T	T	T	T	T	T	T	T	T	T	T	T	T	T	T	T	T
800A	S800-CJ	36kA	T	T	T	T	T	T	T	T	T	T	T	T	T	T	T	T	T
	S800-NJ	50kA	T	T	T	T	T	T	T	T	T	T	T	T	T	T	T	T	T
	S800-RJ	70kA	T	T	T	T	T	T	T	T	T	T	T	T	T	T	T	T	T
	S800-NE	50kA	T	T	T	T	T	T	T	T	T	T	T	T	T	T	T	T	T
	S800-RE	70kA	T	T	T	T	T	T	T	T	T	T	T	T	T	T	T	T	T
	H800-NE	125kA	T	T	T	T	T	T	T	T	T	T	T	T	T	T	T	T	T
	L800-NE	200kA	T	T	T	T	T	T	T	T	T	T	T	T	T	T	T	T	T
1000A	S1000-SE	50kA	-	T	T	T	T	T	T	T	T	T	T	T	T	T	T	T	T
	S1000-NE	70kA	-	T	T	T	T	T	T	T	T	T	T	T	T	T	T	T	T
1250A	S1250-SE	50kA	-	T	T	T	T	T	T	T	T	T	T	T	T	T	T	T	T
	S1250-NE	70kA	-	T	T	T	T	T	T	T	T	T	T	T	T	T	T	T	T
	S1250-GE	100kA	-	T	T	T	T	T	T	T	T	T	T	T	T	T	T	T	T
1600A	S1600-SE	50kA	-	-	-	T	T	T	T	T	T	T	T	T	T	T	T	T	T
	S1600-NE	100kA	-	-	-	T	T	T	T	T	T	T	T	T	T	T	T	T	T

Notes: 1. All ACB's have Ii set at NON, MCR ON.
2. Assuming ACB time settings are greater than MCCB.
3. The above table is in accordance with IEC 60947-2, Annex A.
4. External relay can be used - Contact Terasaki for further details.
5. All values shown at 400V AC.

T= Total Selectivity

8 Technical Data

Discrimination with 'T' type fuses

The following table should be used as a guide when selecting Terasaki *TemPower2* Air Circuit Breakers and fuses (BS88/IEC60269) which are immediately downstream from a transformer.

In and I_R are set to the full rated current of the transformer, and t_R, Isd and tsd are at standard transformer settings.
Listed are the maximum fuse ratings that can be used when downstream from a given ACB at these settings.

Also included are the maximum fuse ratings that can be used downstream when t_R, Isd and tsd are at their maximum settings.

All information listed is based on a transformer secondary voltage of 415V.

TRANSFORMER	kVA	500	630	750	800	1000	1250	1600	2000
	F.L.C. (A)	696	876	1043	1113	1391	1739	2226	2782
TemPower2	Type	***AR208S***	***AR212S***	***AR212S***	***AR212S***	***AR216S***	***AR220S***	***AR325S***	***AR332S***
	C.T. (A)	800	1250	1250	1250	1600	2000	2500	3200
SETTINGS **(AGR-L)**	In	1	0.8	1	1	1	1	1	1
	I_R	0.9	0.9	0.85	0.9	0.9	0.9	0.9	0.9
	t_R (sec)	20	20	20	20	20	20	20	20
	Isd	6	6	6	6	6	6	6	6
	tsd (mcec)	400	400	400	400	400	400	400	400
Max.fuse rating with standard ACB settings	Note:1 (Amps)	355	400	500	500	500	630	800	1000
Max.fuse rating with maximum ACB settings	(Amps)	450	500	670	710	800	1000	1250	1250 Note:2

> The above 'In' settings are based on 100% of Rated Current (Ict).
> Table Reference : I_R - Long Time Delay Pickup Current, t_R - Long Time Delay Time Setting, Isd - Short Time Delay Pickup Current, tsd - Short Time Delay Time Setting.

Notes:

Note:1 It is possible to increase the maximum fuse rating by utilising the 'ramp' facility on the on the *TemPower2* Protection Relay (AGR).

Note:2 Information on fuses above 1250A rating was not available.

Note:3 All ACBs have Ii (Instantanious) set to NON. (MCR can be set to ON)

Please note the above table is meant only for guidance, individual installations should have a specific discrimination study undertaken.

Accessories For Dual Supply Changeover Systems

TemTransfer 2 Automatic Changeover Controller

TemTransfer 2 is fully configurable Automatic Changeover Controller (ACC) for use in standby power applications. The module will monitor the voltage and frequency of the incoming AC mains (utility) supply and in the event of a failure will issue a start command to the generator control system.
The controller (ACC) is designed to monitor the incoming AC mains supply (1 or 3 phases) for under/over voltage and under/over frequency. Should any of the parameters fall out of limit, the module will issue a command to the generating set controller. Once the generator set is available and producing an output within limits, ***TemTransfer 2*** will control the transfer device and switch the load from the mains (utility) to the generating set.
When the mains (utility) supply returns to within limits, the module will command a return to the mains (utility) supply and shut down the generator after a suitable cooling run. Various timing sequences are available to prevent nuisance starting or unnecessary supply breaks.

TemTransfer 2 Product Features

TemTransfer 2's back-lit LCD shows system status and indicates any system warnings via a 4 line text display. Red and green LEDs indicate the operational status of the network. The module can be easily configured by using ***TemTransfer 2*** Configuration Suite PC Software, via an interface kit (optional).

- Back-lit LCD with 4 line text display
- Real time clock
- PC / Front panel configuration
- Volt-free relays
- Configurable timers
- 5 configurable outputs
- 10 configurable inputs
- Event log
- Auto start inhibit
- Load inhibit

Supporting many different topologies, configurable timers, volt-free digital inputs and outputs make the ***TemTransfer 2*** controller a fully flexible solution to suit a wide variety of applications.

Fixed and Drawout Pattern ACB's AR208 to AR663 (800A to 6300A)

COMPANY NAME:	EMAIL ADDRESS:
CONTACT NAME:	ORDER NUMBER:
TELEPHONE NUMBER:	QUANTITY:
FAX NUMBER:	DELIVERY TIME REQUEST :

1.TemPower 2 ACB: Enter your choice in the boxes provided (Refer to the catalogue for ratings and specfications)

TERASAKI ACB TYPE	AR		FOR EXAMPLE - AR 325
ENTER CIRCUIT BREAKER TYPE - Type S, H or SB			'H' TYPES ARE ONLY AVAILABLE ON 1250A TO 3200A ACBS AND 'SB' TYPE ON THE 4000A ACB
ENTER RATED CURRENT - Amps			
ENTER SENSOR KIT RATING - Ict			ONLY ENTER A VALUE IF DIFFERENT FROM RATED CURRENT
ENTER NUMBER OF POLES			

2.Type of Mounting, Connections and Shutters: Tick required boxes.

Fixed Pattern. ☐ Not available on AR4 & AR6 ACBs

Drawout Pattern. ☐

	Horizontal	Vertical	Front
Top - Connections.			
Bottom - Connections.			

For AR4 & AR6 ACBs only vertical connections are available

Control Circuit Terminal Cover	
Main Circuit Shutters	
Control Circuit Shutters	

3.AGR - Protection Relay and Protection Options: Tick required boxes.

Non Automatic. ☐ **Go to Section 4 - Indication**

	AGR-11B	AGR-21/22B				AGR-31B			
	Economy Protection - Dial	Standard Protection - LCD				Enhanced Protection - LCD			
Protection Functions	AGR-11BL	AGR-21BL	AGR-21BR	AGR-21BS	AGR-22BS	AGR-31BL	AGR-31BR	AGR-31BS	----
AL		----	----	----	----	----	----	----	----
PS	----				----				----
GL		----	----	----	----	----	----	----	----
GS		----	----	----	----	----	----	----	----
PG	----			----	----			----	----
PR	----	----	----	----		----	----		----
Protection Options									
N-Phase Protection -NP.				----	----			----	----
S1-Contact Temperature Monitoring - OH.	----	----	----	----	N2	N2	N2	N2	----
S1-Trip Indicator.		N2	N2		N2	N2	N2	N2	----
S1-Phase Rotation Protection - NS.	----	N2	N2	----	----	N2	N2	----	----
S1-Restricted Ground Fault - REF. **N4**	----	N2	N2	----	----	N2	N2	----	----
S2-Second Pre -Trip Alarm - PTA2.	----	----	----	----	N3	----	----	N3	----
S2-Undervoltage Alarm - UVA.	----	----	----	----	N3	N3	N3	N3	----
S2-Spring Charge Indicator.					N3	N3	N3	N3	----
Zone Interlock - Z.	----	----	----	----					----
Communication - C.	----								----
Earth Leakage - ELT.	----	----	----	----	----			----	----

Please specify control voltage	AC100-120V		AC200-240V		DC24V		DC48V		DC100-25V		DC200-250V	

Example of AGR Protection Relay Description

AGR	- 21BL	- P	S

RELAY KEY

- Protection Relay Family.
- Protection Relay Group.
- Protection Function and Indication.

A = LSI PROTECTION. (as standard on all protection relays)

G = A + UNRESTRICTED GROUND FAULT PROTECTION.

P = A + PRE TRIP ALARM.

R = A + REVERSE POWER.

All AGR-B Protection Relays have individual operation contact indicators except the AGR-11B, which has a single operation contact indicator.

AGR BL Type Protection Relay - INDUSTRIAL & TRANSFORMER
AGR BR Type Protection Relay - CHARACTERISTICS TO IEC 60255-3
AGR BS Type Protection Relay - GENERATOR

For AGR-31B please state system voltage - _____ Volts

Specify generator full load current (In) if applicable - _____ Amps (BS Type Relay)

Back lit LCD for AGR-21B, 22B (option) ☐

NOTES:

N1 - Soon to be available.

N2 - Only one function can be selected from section **S1.**

N3 - Only one function can be selected from section **S2.**

N4 - Restricted Ground Fault only available with PG function.

Fixed and Drawout Pattern ACB's AR208 to AR663 (800A to 6300A)

4.Indication Accessories: Tick required boxes.

4AB Auxiliary Switches
7AB Auxiliary Switches
10AB Auxiliary Switches

	Insert	Isolated	Test	Conn	
2 Position Switches (Write a '0', '1' or a '2', total 2)					= Total 2.
4 Position Switches (Write a '0', '1' or a '2', total 4)					= Total 4.

Trip Indication Switch	Normal	Gold	Open/Close Cycle Counter	
Spring Charge Switch	Normal	Gold		
Ready to Close Switch	Normal	Gold		

5.Electrical Operation Accessories: Tick required boxes.

Double Closing Coil 24V DC & 240V AC Only (Short Rated)
Double Shunt Trip Coil 24V DC &240 V AC Only (Short Rated)
Split Circuit** (For Motor and Closing Coil)

Capacitor Shunt Trip 110 AC (Not Available with UVT)

**Split Circuit - Voltages for the motor and closing coil must be indicated below.

AC - Control Voltage	AC100	AC110	AC120	AC200	AC220	AC230	AC240	AC380	AC400	AC415	AC440
Shunt Trip Continuously Rated (Short Rated with UVT)								-----	-----	-----	-----
Motor Operator and Closing coil											
Closing Coil (Split Circuit)**											
Motor Operator (Split Circuit)**											
Undervoltage Trip Device - Instantaneous											
Undervoltage Trip Device - Time-Delay											

DC - Control Voltage	DC24	DC30	DC48	DC100	DC110	DC125	DC200	DC220	DC250
Shunt Trip Continuously Rated (Short Rated with UVT)									
Motor Operator and Closing coil		-----							-----
Closing Coil (Split Circuit)**		-----							-----
Motor Operator (Split Circuit)**		-----							-----
Undervoltage Trip Device - Instantaneous		-----		-----		-----	-----	-----	-----

6.External Accessories: Tick required boxes.

Door Flange IP20		IP55 Transparent Cover	
Door Flange IP31		Fixing Blocks	
Standard Drawout Handle		Test Jumper	
Storage Drawout Handle		Auto-Discharge	
Mal-insertion Prevention Device (Insert Code in Box)		Lifting Plates	
InterPole Barriers (Not Applicable for Front Connections)		OCR Checker ANU-1	
Step Down Transformer (P380-440V/S220V)		OCR test interfaceunit ANU-2	
Tropicalisation Treatment		Main Shutter Padlock Device	
Anti-Corrosion Treatment		IP3X Chassis Protection	
Cold Climate Treatment			
Test Report (Enter Number of Copies in Box)		Lifter Loader AWR-1B	For AR 2, 3 & 440SB
		AWR-2B	For AR 2, 3, 4 & 6

7.Locking and Interlocking Systems: Tick required boxes.

Horizontal Mechanical Interlock for three ACBs, Gen. ACB Interlocked with outer ACBs	Type A (4)	
Horizontal Mechanical Interlock for three ACBs, one or two from three	Type B (2)	
Horizontal Mechanical Interlock for two ACBs, one from two	Type C (1)	
Horizontal Mechanical Interlock for three ACBs, one from three	Type D (3)	

Type A - Indicate position of Gen. ACB: Left ☐ Cent ☐ Right ☐

All Types - Pitch 'P1'(1st & 2nd), 'P2' (2nd & 3rd) P1= ☐ mm P2= ☐ mm

Vertical Mechanical Interlock for two ACBs, one from two ☐
Enter Vertical Pole Pitch 'P' Between ACBs P= ☐ mm

Door Interlock ☐ Storage drawout handle is recommended.

Cylinder lock (Lock in Off) and key
Cylinder lock (Lock in On) and key
Lock in Off Padlock Facility

Castell Fitting (Lock in Off) - Facility only
Castell Fitting (Lock in On) - Facility only
Castell Lock (Lock in Off) and Key (Factory fitted-European market only) — Enter Castell symbol required.
Castell Lock (Lock in On) and Key (Factory fitted-European market only) — Enter Castell symbol required.

Tick One Box

8.Earthing Devices: Tick required boxes.

Body (Portable Part) ☐ Chassis (Permanent Part) ☐

Earthing Device Note:
Not available with front connections.
Not recommended with a UVT, as manual disconnection is required.

For Customer Notes or References.

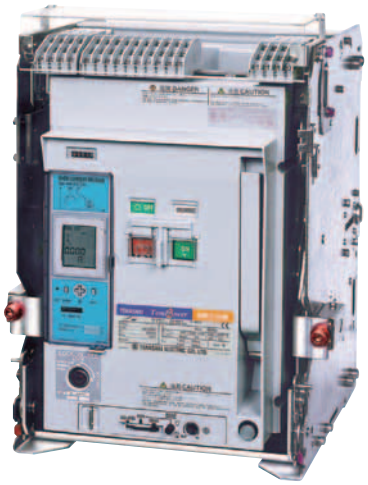

TERASAKI ELECTRIC CO., LTD.

Head Office: 6-13-47 Kamihigashi, Hirano-ku, Osaka 547-0002, Japan
Circuit Breaker Division: 6-13-47 Kamihigashi, Hirano-ku,
Osaka 547-0002, Japan

TEL +81-6-6791-2763
FAX +81-6-6791-2732
int-sales@terasaki.co.jp
http://www.terasaki.co.jp/

TERASAKI ELECTRIC (M) SDN, BHD.

Lot 3, Jalan 16/13D, 40000 Shah Alam, Selangor Darul Ehsan, Malaysia

TEL +60-3-5549-3820
FAX +60-3-5549-3960
terasaki@terasaki.com.my

TERASAKI ELECTRIC TRADING & SERVICES (M) SDN. BHD.

No. 20 & 22, Jalan Rajawali 2, Bandar Puchong Jaya,
Jalan Puchong, 47100 Selangor Darul Ehsan, Malaysia

TEL +60-3-8070-2486, +60-3-8075-1542
FAX +60-3-8070-2481
sales@terasaki.com.my

TERASAKI DO BRASIL LTDA.

Rua Olof Palme, No. 765,
Barra da Tijuca - Rio de Janeiro, Brazil

TEL +55-21-3301-9898
FAX +55-21-3301-9861
terasaki@terasaki.com.br
http://www.terasaki.com.br

TERASAKI ELECTRIC (CHINA) LTD.

72 Pacific Industrial Park, Xin Tang Zengcheng,
Guangzhou 511340, China

TEL +86-20-8270-8556
FAX +86-20-8270-8586
terasaki@public.guangzhou.gd.cn

TERASAKI ELECTRIC GROUP SHANGHAI REPRESENTATIVE OFFICE

Room No. 1405-6, Tomson Commercial Building
710 Dong Fang Road, Pudong, Shanghai, 200122, China

TEL +86-21-58201611
FAX +86-21-58201621
terasaki@vip.163.com

TERASAKI ELECTRIC (EUROPE) LTD.

80 Beardmore Way, Clydebank Industrial Estate
Clydebank, Glasgow, G81 4HT, Scotland (UK)

TEL +44-141-941-1940
FAX +44-141-952-9246
marketing@terasaki.co.uk
http://www.terasaki.com/

TERASAKI ELECTRIC (EUROPE) LTD. FILIALE ITALIA

Via Ambrosoli, 4A-20090 Rodano, Milano, Italy

TEL +39-02-92278300
FAX +39-02-92278320
terasaki@terasaki.it
http://www.terasaki.it/

TERASAKI ELECTRIC (EUROPE) LTD. SUCURSAL EN ESPAÑA

Pol. Ind. Coll de la Manya, C/Cal Ros dels Ocells 5-7,
08403 Granollers, Barcelona, Spain

TEL +34-93-879-60-50
FAX +34-93-870-39-05
terasaki@terasaki.es
http://www.terasaki.es/

TERASAKI ELECTRIC (EUROPE) LTD. FILIAL SVERIGE

Box 2082 SE-128 22 Skarpnäck Sweden

TEL +46-8-556-282-30
FAX +46-8-556-282-39
info@terasaki.se
http://www.terasaki.se/

TERASAKI CIRCUIT BREAKERS (S) PTE. LTD.

17 Tuas Street Singapore 638454

TEL +65-6744-9752
FAX +65-6748-7592
tecs@tecs.com.sg

Latest data can download by matrix code.

Ratings and specifications in this catalogue may be subject to change without notice.

JAN. 2018 Ref No. '18-I55E